# RELOCATION OF ORAL HEALTH CLINIC TO 200 JOHN ST. OSHAWA

## 200 John St. Oshawa, Ontario

**NAME OF CONSULTANT :** BARRY BRYAN ASSOCIATES
**CERTIFICATE OF PRACTICE NUMBER : 5192**
250 WATER STREET, SUITE 201
WHITBY, ONTARIO, CANADA. LIN 0G5
TEL : (905) - 666 - 5252
(Toronto) (905) - 427 - 4495
FAX : (905) - 666 - 5256

**NAME OF PROJECT :**
**RELOCATION OF DENTAL CLINIC TO 200 JOHN ST. OSHAWA**

**LOCATION OF PROJECT :**
**200 John St, Oshawa, ON.**

**DATE :**
**FEBRUARY 2021**

| | Ontario Building Code Data Matrix Part 3 | | OBC Reference |
|---|---|---|---|
| 3.00 | Building Code Version: | O. Reg. 332/12 Last Amendment: O. Reg. 191/14 | |
| 3.01 | Project Type: | ☐ New ☐ Addition ☑ Renovation<br>☐ Change of use ☐ Addition and Renovation<br>Description NEW DENTAL CLINIC | [A] 1.1.2. |
| 3.02 | Major Occupancy Classification: | Occupancy: Group 'D' Use: DENTAL CLINIC | 3.1.2.1.(1) |
| 3.03 | Superimposed Major Occupancies: | ☑ Yes ☐ No<br>Description EXISTING RETAIL MALL W/ OFFICES | 3.2.2.7 |
| 3.04 | Building Area (m²) | Description / Existing / New / Total<br>Total= | [A] 1.4.1.2. |
| 3.05 | Gross Area (m²) | Description / Existing / New / Total<br>Total= (EXISTING NO CHANGE) | [A] 1.4.1.2. |
| 3.06 | Mezzanine Area (m²) | Description N/A / Existing - / New - / Total -<br>Total= | 3.2.1.1 |
| 3.07 | Building Height | 2(TWO) Storeys above grade EX. (m) Above grade<br>- Storeys below grade | [A] 1.4.1.2 & 3.2.1.1 |
| 3.08 | High Building | ☐ Yes ☑ No | |
| 3.09 | Number of streets/ fire fighter access: | 2(TWO) street(s) | 3.2.2.10 & 3.2.5 |
| 3.10 | Building Classification: | Group/ Div. OVER 5 YEARS EXISTING MALL & OFFICES | 3.2.2.20. - 83 |
| 3.11 | Sprinkler System<br>* EXISTING SPRINKLER | ☑ Required ☐ Not Required<br>Proposed: ☑ entire building ☐ selected compartments<br>☐ selected floor areas ☐ basement<br>☐ in lieu of roof rating ☐ none | 3.2.1.5 & 3.2.2.17 |
| 3.12 | Standpipe System | ☐ Required ☑ Not Required | 3.2.9 |
| 3.13 | Fire Alarm System | ☑ Required ☐ Not Required *EXISTING | 3.2.4 |
| 3.14 | Water Service/ Supply is Adequate | ☑ Yes ☐ No | |
| 3.15 | ConstructionType:<br>Actual construction | Restriction: ☐Combustible Permitted ☑Non-combustible Required<br>Actual: ☑Combustible ☐Non-combustible ☐Combination<br>Heavy Timber Construction: ☑No ☐Yes | 3.2.2.20. - 83 & 3.2.1.4 |
| 3.16 | Importance Category: | ☐ Low ☐ Low human Occupancy ☐ Post-disaster shelter<br>☐ Normal<br>☐ High ☐ Minor storage building ☐ Explosives or hazardous substances<br>☐ Post-disaster | 4.1.2.1. (3) & T4.1.2.1.B |
| 3.17 | Seismic Hazard Index: | ($I_E$ Fa Sa (0.2))= 0<br>Seismic design required for Table 4.1.1.18. items 6 to 21:<br>((I Fa Sa (0.2))> or = 0.35 or Post-disaster) ☐No ☐Yes | 4.1.2.1. (3) 4.1.8.18.(2) |
| 3.18 | Occupant Load: | REFER TO PART 11 MATRIX | 3.1.17 |
| 3.19 | Barrier-free Design: | ☑ Yes Explanation AS PER SECT 3.8.3 OBC<br>☐ No | 3.8 |
| 3.20 | Hazardous Substances: | ☐ Yes Explanation<br>☑ No | 3.3.1.2 & 3.3.1.19 |
| 3.21 | Required Fire Resistance Ratings: | Horizontal Assembly / Rating / Supporting Assembly (H) / Non combustible in lieu of rating?<br>Floors over basement - - ☐No ☐Yes ☑N/A<br>Floors - - ☐No ☐Yes ☑N/A<br>Mezzanine - - ☐No ☐Yes ☑N/A<br>Roof - - ☐No ☐Yes ☑N/A | 3.2.2.20. - 83 & 3.2.1.4 |
| 3.22 | Spatial Separation: | (see below) EXISTING NO CHANGE | 3.2.3 |
| 3.23 | Plumbing Fixture Requirements: | SEE OBC PART 11 MATRIX | 3.7.4 |
| 3.24 | Energy Efficiency: | Compliance Path: -<br>Climatic Zone: Zone 5 (Whitby) OBC Table: N/A | |
| 3.25 | Notes: | | |

3.22 Spatial Separation:

| Wall | Area Of EBF (m²) | L.D. (m) | L/H or H/L | Permitted Max. % Of Openings | Proposed % Of Openings | FRR (Hours) | Noncombustible construction | Combustible construction w/ noncombustible cladding |
|---|---|---|---|---|---|---|---|---|
| North | | | | | | | | |
| South | | | | | | | | |
| East | | | | | | | | |
| West | | | | | | | | |

(Addition wall areas contiued below ) — EXISTING NO CHANGE

**NAME OF CONSULTANT :** BARRY BRYAN ASSOCIATES
**CERTIFICATE OF PRACTICE NUMBER : 5192**
250 WATER STREET, SUITE 201
WHITBY, ONTARIO, CANADA. LIN 0G5
TEL : (905) - 666 - 5252
(Toronto) (905) - 427 - 4495
FAX : (905) - 666 - 5256

**NAME OF PROJECT :**
**RELOCATION OF DENTAL CLINIC TO 200 JOHN ST. OSHAWA**

**LOCATION OF PROJECT :**
**200 John St, Oshawa, ON.**

**DATE :**
**FEBRUARY 2021**

| | Ontario Building Code Data Matrix Part 11 - Renovation of Existing Building | | OBC Reference |
|---|---|---|---|
| 11.00 | Building Code Version: | O. Reg. 332/12 Last Amendment: O. Reg. 191/14 | |
| 11.01 | Project Type: | ☐ Addition ☑ Renovation ☐ Addition and Renovation<br>☐ Change of use<br>Description NEW DENTAL CLINIC | [A] 1.1.2. |
| 11.02 | Major Occupancy Classification: | Occupancy: Group 'D' Use: DENTAL CLINIC | 3.1.2.1.(1) |
| 11.03 | Superimposed Major Occupancies: | ☐ Yes ☑ No<br>Description - | 3.2.2.7 |
| 11.04 | Building Area (m²) | Description: Ground Floor (Tenants space only) / Existing 824.3 / New - / Total 824.3<br>Total= 824.3 / - / 824.3 | [A] 1.4.1.2. |
| 11.05 | Building Height | 1 (ONE) Storeys above grade EX. (m) Above grade<br>Storeys below grade | [A] 1.4.1.2 & 3.2.1.1 |
| 11.06 | Number of streets/ fire fighter access: | 2 (Two) street(s) | 3.2.2.10 & 3.2.5 |
| 11.07 | Building Size: | ☐ Small ☐ Medium ☑ Large ☐ > Large | T.11.2.1.1.B.-N. |
| 11.08 | Existing Building Classification: | Change in Major Occupancy: ☑ Yes ☐ Not Applicable (no change of major occupancy)<br>Construction Index: 4<br>Hazard Index: 6<br>* WAS PREVIOUSLY A TENANT SPACE FOR A "COLLEGE". C.I. & H.I. BASED ON ENTIRE MALL (11.22.1.K)<br>Importance Category: ☐ Low ☑ Normal ☐ High ☑ Post-disaster | 11.2.1 T11.2.1.1A T11.2.1.1B to N, 4.2.1(3) & 5.2.2.1.(2) |
| 11.09 | Renovation Type: | ☐ Basic Renovation ☑ Extensive Renovation | 11.3.3.1 & 11.3.3.2 |
| 11.10 | Occupant Load: | Floor Level/ Area: 824.3 / - ; Occupancy Type: 'D' / - ; Based On: 3.7.17.1.(2) / - ; Occup. Load: 74 / - | 3.1.17 |
| 11.11 | Plumbing Fixture Requipments: | Ratio: Male/Female = 50:50 Except as noted otherwise<br>Floor level/ Area: Ground Floor / 824.3 No Change; Occupant Load: 37M 37F; OBC Reference: 3.1.17.1.(2) & 3.7.4.7.(1); Fixtures Required: 3/SEX; Fixtures Provided: 3M, 3F + 1 UNIVERSAL | 3.7.4 |
| 11.12 | Barrier-free Design: | ☑ Yes Explanation NEW UNIVERSAL WASHROOM PROVIDED WITH CORRIDOR CLEARANCES<br>☐ No | 11.3.3.2.(2) |
| 11.13 | Reduction in Performance Level: | Structural ☑ No ☐ Yes<br>By Increase in occupant load: ☑ No ☐ Yes<br>By change of major occupancy: ☑ No ☐ Yes<br>Plumbing ☑ No ☐ Yes<br>Sewage - system: ☑ No ☐ Yes | 11.4.2.1<br>11.4.2.2<br>11.4.2.3<br>11.4.2.4<br>11.4.2.5 |
| 11.14 | Compensating Construction: | ☐ Yes ☑ No<br>Structural ☑ No ☐ Yes<br>By Increase in occupant load: ☑ No ☐ Yes<br>By change of major occupancy: ☑ No ☐ Yes<br>Plumbing ☑ No ☐ Yes<br>Sewage - system: ☑ No ☐ Yes<br>Extension of Combustible Construction: ☑ No ☐ Yes | 11.4.2.1<br>11.4.2.2<br>11.4.2.3<br>11.4.2.4<br>11.4.2.5<br>11.4.2.6<br>11.4.2.7 |
| 11.15 | Compliance Alternatives Proposed: | ☑ No ☐ Yes | 11.5.1. |
| 11.16 | Notes: | - | 11.5.1 |

ARCHITECTURAL/STRUCTURAL:

BARRY BRYAN ASSOCIATES
Architects
Engineers
Project Managers
250 Water St.
Suite 201
Whitby, Ontario
L1N 0G5
Tel: (905) 666-5252
Fax: (905) 666-5256
e-mail: bba@bba-archeng.com

MECHANICAL:

MADONNA ENGINEERING INC.
93 Woodstream Blvd Unit 10
Woodbridge, Ontario L4L 7Y7
Tel: (905) 265 1911 Fax: (905) 265 1998

ELECTRICAL:

HCC ENGINEERING
DESIGN AND TECHNOLOGY SERVICES GROUP
HCC ENGINEERING LIMITED
40 EGLINTON AVENUE EAST, SUITE 401
TORONTO, ONTARIO, M4P 3A2
Tel: (416) 932-2423

DENTAL CONSULTANT:

HENRY SCHEIN® DENTAL
Henry Schein Canada, Inc.
221 Jacob Keffer Parkway,
Concord, Ontario
L4K 5T9

# LIST OF DRAWINGS


| SHEET # | DWG # | TITLE |
|---|---|---|
| **ARCHITECTURAL** | | |
| 001 | A-001 | DRAWING LIST & OBC MATRIX |
| 002 | A-002 | LIFE SAFETY PLAN |
| 003 | A-003 | DEMOLITION GROUND FLOOR PLAN |
| 004 | A-004 | DEMOLITION REFLECTED CEILING PLAN |
| 005 | A-005 | GROUND FLOOR PLAN |
| 006 | A-006 | REFLECTED CEILING PLAN |
| 007 | A-007 | FINISH & EQUIPMENT PLAN |
| 008 | A-008 | ROOF PLAN |
| 009 | A-009 | DEMOLITION & NEW ELEVATIONS |
| 010 | A-010 | WALL SECTIONS & BUILDING SECTION |
| 011 | A-011 | WALL SECTIONS |
| 012 | A-012 | ENLARGED WASHROOM PLANS & ELEVATIONS |
| 013 | A-013 | MILLWORK DETAILS |
| 014 | A-014 | MILLWORK DETAILS |
| 015 | A-015 | MILLWORK DETAILS |
| 016 | A-016 | MILLWORK DETAILS |
| 017 | A-017 | SCHEDULES |
| **STRUCTURAL** | | |
| 018 | ST-001 | ROOF FRAMING PLAN, GENERAL NOTES, TYPICAL DETAILS & SCHEDULE |
| **MECHANICAL** | | |
| 019 | M-001 | GROUND FLOOR PLAN - HVAC DEMOLITION |
| 020 | M-002 | GROUND FLOOR PLAN - HVAC SHEET METAL |
| 021 | M-003 | GROUND FLOOR PLAN - HVAC PIPING |
| 022 | M-004 | ROOF PLAN - MECHANICAL DEMOLITION |
| 023 | M-005 | ROOF PLAN - MECHANICAL CONSTRUCTION |
| 024 | M-006 | PART GROUND FLOOR PLAN - PLUMBING DEMOLITION |
| 025 | M-007 | GROUND FLOOR PLAN - PLUMBING CONSTRUCTION |
| 026 | M-008 | GROUND FLOOR PLAN - DRAINAGE DEMOLITION |
| 027 | M-009 | GROUND FLOOR PLAN - DRAINAGE CONSTRUCTION |
| 028 | M-010 | GROUND FLOOR PLAN - FIRE PROTECTION DEMOLITION |
| 029 | M-011 | GROUND FLOOR PLAN - FIRE PROTECTION CONSTRUCTION |
| 030 | M-012 | MECHANICAL - SCHEDULES |
| 031 | M-013 | MECHANICAL - DETAILS |
| 032 | M-014 | MECHANICAL - DETAILS (CONT'D) |
| 033 | M-015 | CONTROL SEQUENCES, LEGEND & DRAWING LIST |
| **ELECTRICAL** | | |
| 034 | E-001 | ELECTRICAL LEGEND AND DETAILS |
| 035 | E-002 | ELECTRICAL DETAILS |
| 036 | E-003 | ELECTRICAL DETAILS |
| 037 | E-004 | ELECTRICAL DETAILS |
| 038 | E-005 | ELECTRICAL DETAILS |
| 039 | E-006 | ELECTRICAL DETAILS |
| 040 | E-007 | ELECTRICAL DETAILS |
| 041 | E-008 | ELECTRICAL FACILITY PLAN |
| 042 | E-009 | ELECTRICAL ROOF PLAN |
| 043 | E-010 | ELECTRICAL PLAN |
| 044 | E-011 | REFLECTED CEILING PLAN |
| 045 | E-012 | ELECTRICAL GROUNDING SYSTEM DETAILS |
| 046 | E-013 | ELECTRICAL DEMOLITION PLAN |
| 047 | E-014 | REFLECTED CEILING DEMOLITION PLAN |
| 048 | E-015 | ELECTRICAL SINGLE LINE DIAGRAM |
| 049 | E-016 | CCTV SYSTEM RISER DIAGRAM |
| 050 | E-017 | ACCESS CONTROL SYSTEM CONDUIT RISER DIAGRAM |
| 051 | E-018 | ACCESS CONTROL SYSTEM RISER DIAGRAM |
| 052 | E-019 | INTRUSION SYSTEM RISER DIAGRAM |
| 053 | E-020 | INTERCOM SYSTEM RISER DIAGRAM |
| **COMMUNICATION** | | |
| 054 | T-001 | COMMUNICATIONS LEGEND AND DETAILS |
| 055 | T-002 | COMMUNICATIONS DETAILS |
| 056 | T-003 | COMMUNICATIONS PLAN |
| 057 | T-004 | COMMUNICATIONS RISER DIAGRAM AND WIRING SCHEMATIC |
| 058 | T-005 | COMMUNICATIONS DEMOLITION PLAN |
| **DENTAL CONSULTANT** | | |
| 059 | A0 | COVER SHEET & GENERAL NOTES |
| 060 | A1 | DENTAL EQUIPMENT PLAN |
| 061 | A2 | SUPPORTS PLAN |
| 062 | A3 | X-RAY PLAN |
| 063 | A3.1 | X-RAY DETAILS |
| 064 | P1 | DENTAL PLUMBING AIR COMPRESSOR & VACUUM LINES |
| 065 | P2 | DENTAL PLUMBING WATER & DRAIN LINES |
| 066 | P3 | DENTAL PLUMBING MEDICAL GASES |
| 067 | D1 | DENTAL ELECTRICAL & PLUMBING DETAILS |
| 068 | D2 | DENTAL ELECTRICAL & PLUMBING DETAILS |


NOTE: ALL DIMENSIONS ARE IN METRES UNLESS OTHERWISE NOTED.

ALL MEASUREMENTS ARE TO BE VERIFIED BY THE CONTRACTOR ON SITE AND ANY DISCREPANCIES ARE TO BE REPORTED BEFORE PROCEEDING WITH THE WORK. THE REGION OF DURHAM ASSUMES NO RESPONSIBILITY FOR THE ACCURACY OF THE LOCATION OF EXISTING SERVICES AS INDICATED ON THIS DRAWING. DO NOT SCALE DRAWINGS.

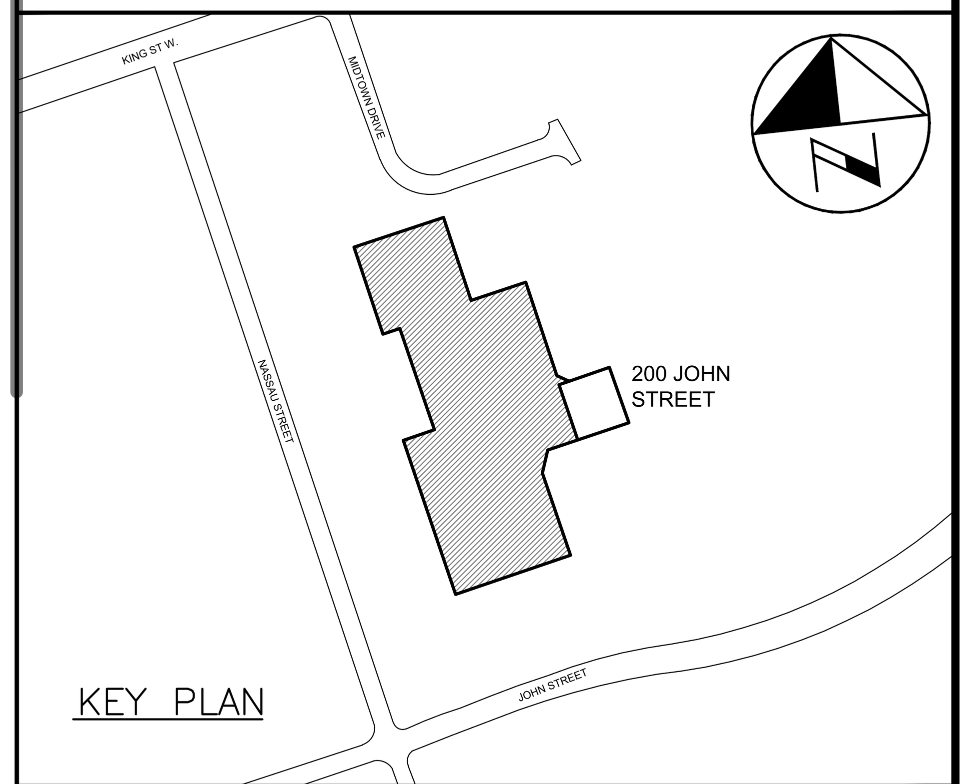


KEY PLAN

CONSULTANT REVISIONS

| NO. | DATE | NAME | REVISIONS |
|---|---|---|---|

PRIME CONSULTANT

BARRY BRYAN ASSOCIATES
Architects
Engineers
Project Managers
250 Water St.
Suite 201
Whitby, Ontario
L1N 0G5
Tel: (905) 666-5252
Fax: (905) 666-5256
e-mail: bba@bba-archeng.com

ONTARIO ASSOCIATION OF ARCHITECTS — ISSUED FOR PERMIT — WM WEIMA FEB 17/21 — WILLIAM WEIMA LICENCE 4910 — 20060

SUB—CONSULTANT

| | | | |
|---|---|---|---|
| DESIGN BY: | BBA | SCALE | AS SHOWN |
| DRAWN BY: | KM | DATE: | 2021-02-12 |
| CHECKED BY: | CM | CONSULTANT PROJECT NO. | 20060 |
| APPROVED BY: | NS | | |

CONTRACT REVISIONS

| NO. | DATE | NAME | REVISIONS |
|---|---|---|---|
| 5 | FEB 12/21 | BBA | ISSUED FOR PERMIT & TENDER |
| 4 | JAN 13/21 | BBA | RE-ISSUED FOR 90% CLIENT REVIEW |
| 3 | NOV 5/20 | BBA | ISSUED FOR 90% CLIENT REVIEW |
| 2 | AUG 14/20 | BBA | ISSUED FOR REVISED 60% CLIENT REVIEW |
| 1 | MAY 27/20 | BBA | ISSUED FOR 60% CLIENT REVIEW |

DURHAM REGION

THE REGIONAL MUNICIPALITY OF DURHAM
WORKS DEPARTMENT
DESIGN, CONSTRUCTION & ASSET MANAGEMENT

RELOCATION OF DENTAL CLINIC TO 200 JOHN ST., OSHAWA

DRAWING LIST & OBC MATRIX

| | | |
|---|---|---|
| PROPERTY NO. N/A | FACILITY CODE LEA-0-07 | FACILITIES PROJECT NO. LEA-0-07-19-01 |
| CONTRACT NO. T-1032-2021 | DRAWING NO. A-001 | SHEET NO. 001 |

\\filesrv\Project Data\2020\20060 Durham Region-New Dental Clinic, 200 John St. W, Oshawa\Drawings\Current\20060 A-001 COVER.dwg

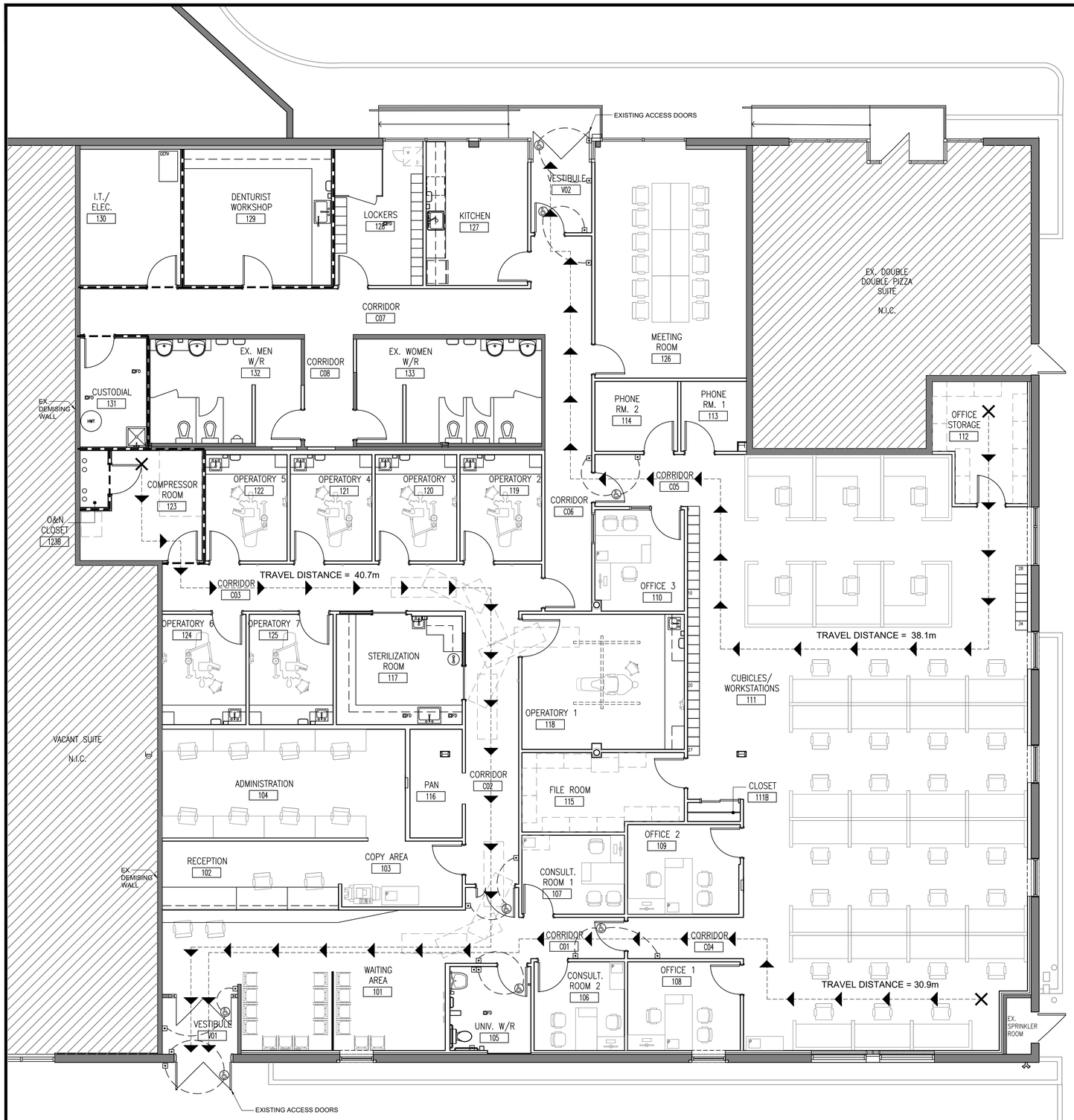


1 / A002 LIFE SAFETY PLAN
1:75

LEGEND

- 1 HOUR FIRE SEPARATION
- EXIT PATHS / TRAVEL DISTANCE
- DENOTES EXISTING PARTITIONS TO REMAIN
- DENOTES EXISTING BUILDING TO REMAIN "AS IS" N.I.C.

TRAVEL DISTANCES:

MAXIMUM TRAVEL DISTANCE: 45m OBC 3.4.2.5(1)(c)

NOTE: ALL DIMENSIONS ARE IN METRES UNLESS OTHERWISE NOTED.

ALL MEASUREMENTS ARE TO BE VERIFIED BY THE CONTRACTOR ON SITE AND ANY DISCREPANCIES ARE TO BE REPORTED BEFORE PROCEEDING WITH THE WORK. THE REGION OF DURHAM ASSUMES NO RESPONSIBILITY FOR THE ACCURACY OF THE LOCATION OF EXISTING SERVICES AS INDICATED ON THIS DRAWING. DO NOT SCALE DRAWINGS.

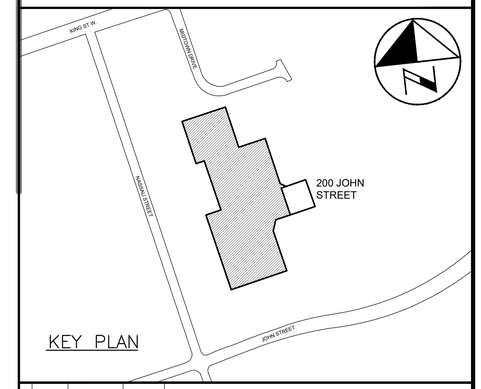


KEY PLAN

CONSULTANT REVISIONS

| NO. | DATE | NAME | REVISIONS |
|---|---|---|---|

PRIME CONSULTANT

BARRY BRYAN ASSOCIATES
Architects
Engineers
Project Managers
250 Water St.
Suite 201
Whitby, Ontario
L1N 0G5
Tel: (905) 666-5252
Fax: (905) 666-5256
e-mail: bba@bba-archeng.com

ONTARIO ASSOCIATION OF ARCHITECTS — WILLIAM WEIMA — LICENCE 4910 — Feb 17/21

SUB-CONSULTANT

| | |
|---|---|
| DESIGN BY: BBA | SCALE 1:75 |
| DRAWN BY: KM | DATE: 2021-02-25 |
| CHECKED BY: WW | CONSULTANT PROJECT NO. 20060 |
| APPROVED BY: NS | |

CONTRACT REVISIONS

| NO. | DATE | NAME | REVISIONS |
|---|---|---|---|
| 5 | FEB 12/21 | BBA | ISSUED FOR PERMIT & TENDER |
| 4 | JAN 13/21 | BBA | RE-ISSUED FOR 90% CLIENT REVIEW |
| 3 | NOV 5/20 | BBA | ISSUED FOR 90% CLIENT REVIEW |
| 2 | AUG 14/20 | BBA | ISSUED FOR REVISED 60% CLIENT REVIEW |
| 1 | MAY 27/20 | BBA | ISSUED FOR 60% CLIENT REVIEW |

DURHAM REGION

THE REGIONAL MUNICIPALITY OF DURHAM
WORKS DEPARTMENT
DESIGN, CONSTRUCTION & ASSET MANAGEMENT

# RELOCATION OF DENTAL CLINIC TO 200 JOHN ST., OSHAWA

## LIFE SAFETY PLAN

| PROPERTY NO. | FACILITY CODE | FACILITIES PROJECT NO. |
|---|---|---|
| N/A | LEA-O-07 | LEA-O-07-19-01 |
| CONTRACT NO. | DRAWING NO. | SHEET NO. |
| T-1032-2021 | A-002 | 002 |

\\flies\r\Project Data\2020\20060 Durham Region-New Dental Clinic, 200 John St. W, Oshawa\Drawings\Current\20060 A-002 LIFESAFETY.dwg

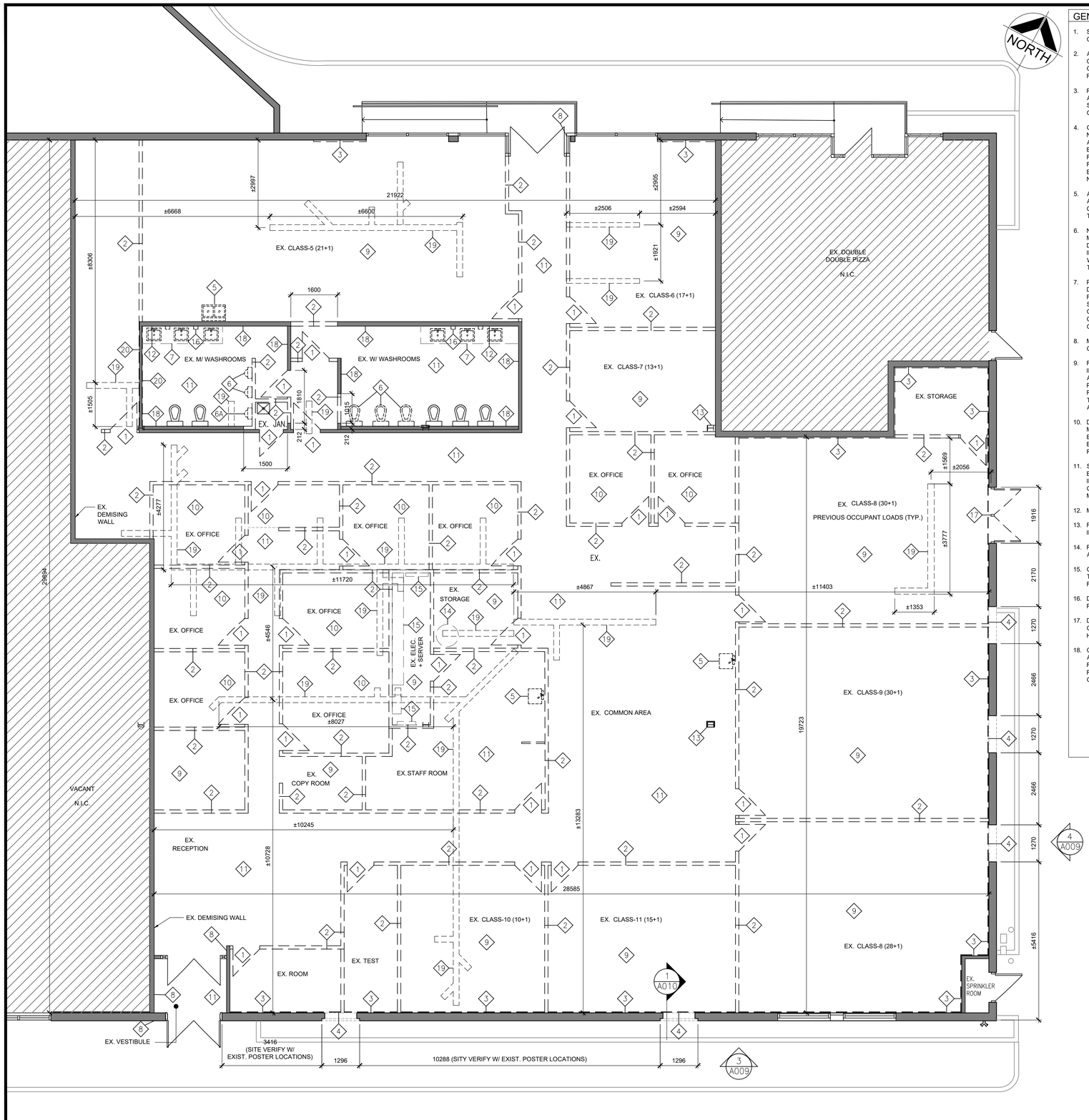


1 A003

## DEMOLITION GROUND FLOOR PLAN

1:75

NOTE: ALL DIMENSIONS ARE IN METRES UNLESS OTHERWISE NOTED.

### GENERAL NOTES

1. SITE VERIFY ALL DIMENSIONS AND CONDITIONS.
2. ALL WORK TO BE IN ACCORDANCE WITH THE ONTARIO BUILDING CODE AND THE OCCUPATIONAL HEALTH AND SAFETY ACT REGULATIONS FOR CONSTRUCTION PROJECTS.
3. PROVIDE PROTECTION IN LOCATIONS APPROVED BY THE OWNER AND CONSULTANT SO AS NOT TO DAMAGE EXISTING STRUCTURE OR PART THEREOF.
4. COMPLETE ALL DEMOLITION WORK NECESSARY TO COMPLETE THE RENOVATIONS AS SHOWN AND AS REQUIRED. DEMOLITION OF BUILDING ELEMENTS INCLUDES COMPLETE REMOVAL OF ALL ASSOCIATED FIXTURES, FITTINGS, HARDWARE, FASTENERS, EQUIPMENT AND ACCESSORIES UNLESS NOTED OTHERWISE.
5. ARCHITECTURAL, STRUCTURAL, MECHANICAL AND ELECTRICAL DEMOLITION DRAWINGS ARE COMPLEMENTARY AND SHALL BE READ TOGETHER.
6. NOTIFY CONSULTANT OF LOAD BEARING MEMBERS OR ASSEMBLIES IDENTIFIED OR DISCOVERED DURING WORK AND NOT INDICATED ON DRAWINGS. DO NOT PROCEED WITH REMOVALS WITHOUT PRIOR REVIEW BY THE CONSULTANT.
7. PROVIDE TEMPORARY SUPPORT OF PIPES, DUCTS AND ELECTRICAL CHASES AS REQUIRED FOR SAFE REMOVAL. EXISTING AND PROPOSED SUPPORTS ARE TO BE REVIEWED BY THE CONSULTANT PRIOR TO THE REMOVAL OF ANY COMPONENTS WHICH MAY FALL, OR CAUSE OTHERS TO FALL.
8. MAINTAIN WORK AREAS AND STORAGE AREAS CLEAN AND ORDERLY AT ALL TIMES.
9. REMOVAL OF EXISTING FLOOR FINISHES IS TO INCLUDE COMPLETE REMOVAL OF BASE AND ALL MORTAR AND ADHESIVES AND PREPARATION OF EXISTING SUBSTRATES TO RECEIVE NEW FLOORING, SATISFACTORY TO THE MANUFACTURER OF NEW FLOOR FINISHES. ALLOW FOR EXCESSIVE LEVELING OF SLABS.
10. DEMOLITION INCLUDES ALL ASSOCIATED MECHANICAL AND ELECTRICAL SERVICES, EQUIPMENT, FITTINGS, FIXTURES, HANGERS, BRACKETS, TRIM AND ACCESSORIES AS REQUIRED TO COMPLETE THE WORK.
11. SAWCUT, BREAK OUT AND MAKE GOOD ALL EXISTING FLOOR SLABS WHERE REQUIRED TO INSTALL NEW UNDERGROUND PLUMBING AND OTHER BURIED SERVICES AS INDICATED ON MECHANICAL AND ELECTRICAL DRAWINGS.
12. MAINTAIN EXISTING FIRE RATINGS.
13. REMOVAL OF DOORS AND FRAMES IS TO INCLUDE REMOVAL OF ALL HARDWARE.
14. REMOVE ALL PROTRUSIONS IN FLOOR SLAB AND GRIND DOWN TO FLOOR LEVEL.
15. CLEAN AND REPAIR ALL EXISTING SURFACES TO REMAIN, AS NECESSARY TO RECEIVE NEW FINISHES.
16. DISCONNECT AND CAP OFF ALL SERVICES PRIOR TO DEMOLITION.
17. DISPOSE OF ALL MATERIALS OFF SITE. COORDINATE ITEMS FOR SALVAGE / HANDOVER WITH OWNER.
18. CONTRACTOR SHALL BE RESPONSIBLE FOR ANY DAMAGE TO THE EXISTING STRUCTURE OR FINISHES SHOWN TO REMAIN AND REPAIR/REPLACE SAME TO THE SATISFACTION OF THE OWNER AND CONSULTANT.

### DEMOLITION NOTES

1. REMOVE AN DISPOSE EXISTING DOOR, FRAME AND ALL ASSOCIATED HARDWARE.
2. REMOVE AND DISPOSE OF EXISTING GYPSUM PARTITION WALL.
3. REMOVE AND DISPOSE OF EXISTING WOOD/METAL WALL FURRING & GYPSUM BOARD.
4. CAREFULLY BREAKOUT AND DISPOSE OF EXISTING EXTERIOR CMU/BRICK WALL FOR NEW WINDOW OPENING. REFER TO DEMOLITION ELEVATIONS FOR EXTENTS OF REMOVAL.
5. EXISTING SINK REMOVED BY OTHERS. CAP EXISTING SERVICES AS REQUIRED.
6. CAREFULLY REMOVE EXISTING TOILETS. URINALS REMOVED BY OTHERS. CAP EXISTING SERVICES AS NOTED ON MECH. TOILETS TO BE DISPOSED OF.

6A. CAREFULLY REMOVE AND RELOCATE EXISTING URINAL. CAP SERVICES AS REQ. REFER TO MECH.

7. CAREFULLY REMOVE AND DISPOSE OF EXISTING COUNTERTOP AND LAVATORIES. PREPARE FOR NEW LAVATORIES AND COUNTERTOP TO BE INSTALLED.
8. PREPARE SURFACES FOR INSTALLATION OF NEW DOOR OPERATOR. REFER TO ELEC.
9. REMOVE & DISPOSE OF EXISTING VCT FLOORING & BASE AND PREPARE CONCRETE SLAB FOR NEW FINISH AS PER SCHEDULE.
10. REMOVE & DISPOSE OF EXISTING CARPET FLOORING & BASE AND PREPARE CONCRETE SLAB FOR NEW FINISH AS PER SCHEDULE.
11. REMOVE & DISPOSE OF EXISTING CERAMIC TILE & BASE AND PREPARE CONCRETE SLAB FOR NEW FINISH AS PER SCHEDULE.
12. EXISTING MIRRORS TO BE CAREFULLY REMOVED, STORED AND RETINSTALLED AS PER WASHROOM ELEVATIONS.
13. REMOVE FURRING FROM EXISTING COLUMN AND PREPARE SURFACES FOR NEW FURRING.
14. REMOVE & DISPOSE EXISTING HWT AS PER MECHANICAL.
15. REMOVE & DISPOSE EXISTING ELECTRICAL PANELS AND EQUIPMENT. REFER TO ELECTRICAL
16. CAREFULLY REMOVE & DISPOSE OF SOAP DISPENSERS.
17. CAREFULLY REMOVE AND DISPOSE OF EXISTING DOOR, FRAME, METAL FURRING AND GYPSUM BOARD. PREPARE OPENING TO RECEIVE NEW WINDOW AS SCHEDULED.
18. CAREFULLY REMOVE & DISPOSE OF CERAMIC WALL TILE AND PREPARE SURFACES TO RECEIVE NEW FINISH AS PER SCHEDULE.
19. SAWCUT AND BREAK OUT EXISTING CONCRETE SLAB AS REQ. TO COMPLETE MECHANICAL OR ELECTRICAL WORK. COORDINATE WITH MECHANICAL & ELECTRICAL DRAWINGS.
20. REMOVE GYPSUM BOARD FROM EXISTING STUD WALL TO PREPARE FOR NEW RATED ASSEMBLY. EXISTING STUDS TO REMAIN.

### DEMOLITION LEGEND

- HATCHED AREA DENOTES NOT PART OF CONTRACT
- EXISTING WALL, PARTITION OR COLUMN
- DENOTES DEMOLITION OF BUILDING ELEMENT
- EXISTING DOOR, FRAME AND TRIM TO REMAIN
- EXISTING DOOR, FRAME AND TRIM TO BE CAREFULLY REMOVED AND DISPOSED OF.

ALL MEASUREMENTS ARE TO BE VERIFIED BY THE CONTRACTOR ON SITE AND ANY DISCREPANCIES ARE TO BE REPORTED BEFORE PROCEEDING WITH THE WORK. THE REGION OF DURHAM ASSUMES NO RESPONSIBILITY FOR THE ACCURACY OF THE LOCATION OF EXISTING SERVICES AS INDICATED ON THIS DRAWING. DO NOT SCALE DRAWINGS.

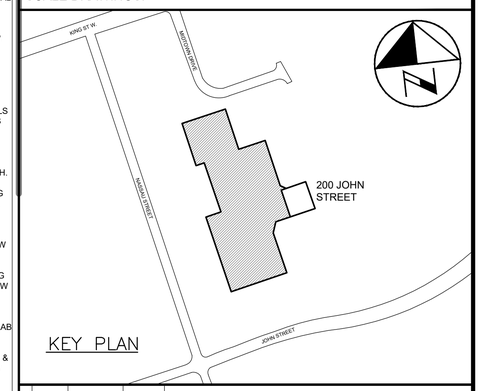


| CONSULTANT REVISIONS | NO. | DATE | NAME | REVISIONS |
|---|---|---|---|---|
| | | | | |

PRIME CONSULTANT

BARRY BRYAN ASSOCIATES
Architects
Engineers
Project Managers
250 Water St.
Suite 201
Whitby, Ontario
L1N 0G5
Tel: (905) 666-5252
Fax: (905) 666-5256
e-mail: bba@bba-archeng.com

ONTARIO ASSOCIATION OF ARCHITECTS — REGISTERED — WILLIAM WEIMA — LICENCE 4010 — FEB 17/21

SUB–CONSULTANT

| | |
|---|---|
| DESIGN BY: BBA | SCALE 1:75 |
| DRAWN BY: KM | DATE: 2021–03–08 |
| CHECKED BY: WW | CONSULTANT PROJECT NO. 20060 |
| APPROVED BY: NS | |

| CONTRACT REVISIONS | NO. | DATE | NAME | REVISIONS |
|---|---|---|---|---|
| | 5 | FEB 12/21 | BBA | ISSUED FOR PERMIT & TENDER |
| | 4 | JAN 13/21 | BBA | RE–ISSUED FOR 90% CLIENT REVIEW |
| | 3 | NOV 5/20 | BBA | ISSUED FOR 90% CLIENT REVIEW |
| | 2 | AUG 14/20 | BBA | ISSUED FOR REVISED 60% CLIENT REVIEW |
| | 1 | MAY 27/20 | BBA | ISSUED FOR 60% CLIENT REVIEW |

THE REGIONAL MUNICIPALITY OF DURHAM
WORKS DEPARTMENT
DESIGN, CONSTRUCTION & ASSET MANAGEMENT

# RELOCATION OF DENTAL CLINIC TO 200 JOHN ST., OSHAWA

## DEMOLITION GROUND FLOOR PLAN

| PROPERTY NO. | FACILITY CODE | FACILITIES PROJECT NO. |
|---|---|---|
| N/A | LEA–O–07 | LEA–O–07–19–01 |
| CONTRACT NO. | DRAWING NO. | SHEET NO. |
| T–1032–2021 | A–003 | 003 |

I:\Files\vProject Data\2020\20060 Durham Region-New Dental Clinic, 200 John St, W, Oshawa\Drawings\Current\20060 A-003 DEMO.dwg

1 / A004 DEMOLITION REFLECTED CEILING PLAN

1:75

NOTE: ALL DIMENSIONS ARE IN METRES UNLESS OTHERWISE NOTED.

NORTH

## CEILING TYPES SCHEDULE

- REMOVE AND DISPOSE OF EXISTING T-BAR CEILING AND TILE
- CAREFULLY REMOVE AND DISPOSE OF EXISTING GYPSUM BOARD CEILING FINISH & FRAMING
- EXISTING LIGHT FIXTURES TO BE REMOVED & DISPOSED OF
- REMOVE AND DISPOSE EXIST. EGGCRATE PLASTIC COVER
- REMOVE AND DISPOSE EXIST. RECESSED FLUORESCENT LGHT.
- REMOVE & DISPOSE EXIST. 150mm RECESSED POT LIGHT
- EXISTING EXTERIOR RECESSED POT LIGHTS
- REMOVE & DISPOSE EXISTING EXHAUST GRILLE & ASSOCIATED DUCTWORK. REFER TO MECHANICAL

## DEMOLITION NOTES

1. REFER TO MECHANICAL DRAWINGS FOR REMOVAL OF EXISTING AIR DIFFUSERS, RETURN AIR GRILLES, EXHAUST FANS AND OTHER MECHANICAL EQUIPMENT.
2. GENERAL NOTES ON A003 APPLY.

## CEILING PLAN NOTATION LEGEND

- EXISTING WALL, PARTITION OR COLUMN
- EX. FINISHED CEILING HEIGHTS
- HATCHED AREA DENOTES NOT IN CONTRACT

ALL MEASUREMENTS ARE TO BE VERIFIED BY THE CONTRACTOR ON SITE AND ANY DISCREPANCIES ARE TO BE REPORTED BEFORE PROCEEDING WITH THE WORK. THE REGION OF DURHAM ASSUMES NO RESPONSIBILITY FOR THE ACCURACY OF THE LOCATION OF EXISTING SERVICES AS INDICATED ON THIS DRAWING. DO NOT SCALE DRAWINGS.

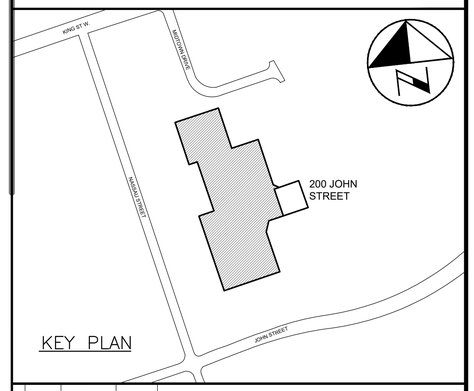


KEY PLAN

CONSULTANT REVISIONS

| NO. | DATE | NAME | REVISIONS |
|---|---|---|---|

PRIME CONSULTANT

BARRY BRYAN ASSOCIATES
Architects
Engineers
Project Managers
250 Water St.
Suite 201
Whitby, Ontario
L1N 0G5
Tel: (905) 666-5252
Fax: (905) 666-5256
e-mail: bba@bba-archeng.com

ONTARIO ASSOCIATION OF ARCHITECTS — WILLIAM WEIMA — LICENCE 4010 — FEB 17/21

SUB-CONSULTANT

| | |
|---|---|
| DESIGN BY: WW | SCALE 1:75 |
| DRAWN BY: KM | DATE: 2021-02-12 |
| CHECKED BY: CM | CONSULTANT PROJECT NO. 20060 |
| APPROVED BY: WW | |

CONTRACT REVISIONS

| NO. | DATE | NAME | REVISIONS |
|---|---|---|---|
| 5 | FEB 12/21 | BBA | ISSUED FOR PERMIT & TENDER |
| 4 | JAN 13/21 | BBA | RE-ISSUED FOR 90% CLIENT REVIEW |
| 3 | NOV 5/20 | BBA | ISSUED FOR 90% CLIENT REVIEW |
| 2 | AUG 14/20 | BBA | ISSUED FOR REVISED 60% CLIENT REVIEW |
| 1 | MAY 27/20 | BBA | ISSUED FOR 60% CLIENT REVIEW |

THE REGIONAL MUNICIPALITY OF DURHAM

WORKS DEPARTMENT

DESIGN, CONSTRUCTION & ASSET MANAGEMENT

# RELOCATION OF DENTAL CLINIC TO 200 JOHN ST., OSHAWA
## DEMOLITION REFLECTED CEILING PLAN

| PROPERTY NO. | FACILITY CODE | FACILITIES PROJECT NO. |
|---|---|---|
| N/A | LEA-O-07 | LEA-O-07-19-01 |
| **CONTRACT NO.** | **DRAWING NO.** | **SHEET NO.** |
| T-1032-2021 | A-004 | 004 |

\\flserv\Project Data\2020\20060 Durham Region-New Dental Clinic, 200 John St. W, Oshawa\Drawings\Current\20060 A-004 DEMO RCP.dwg

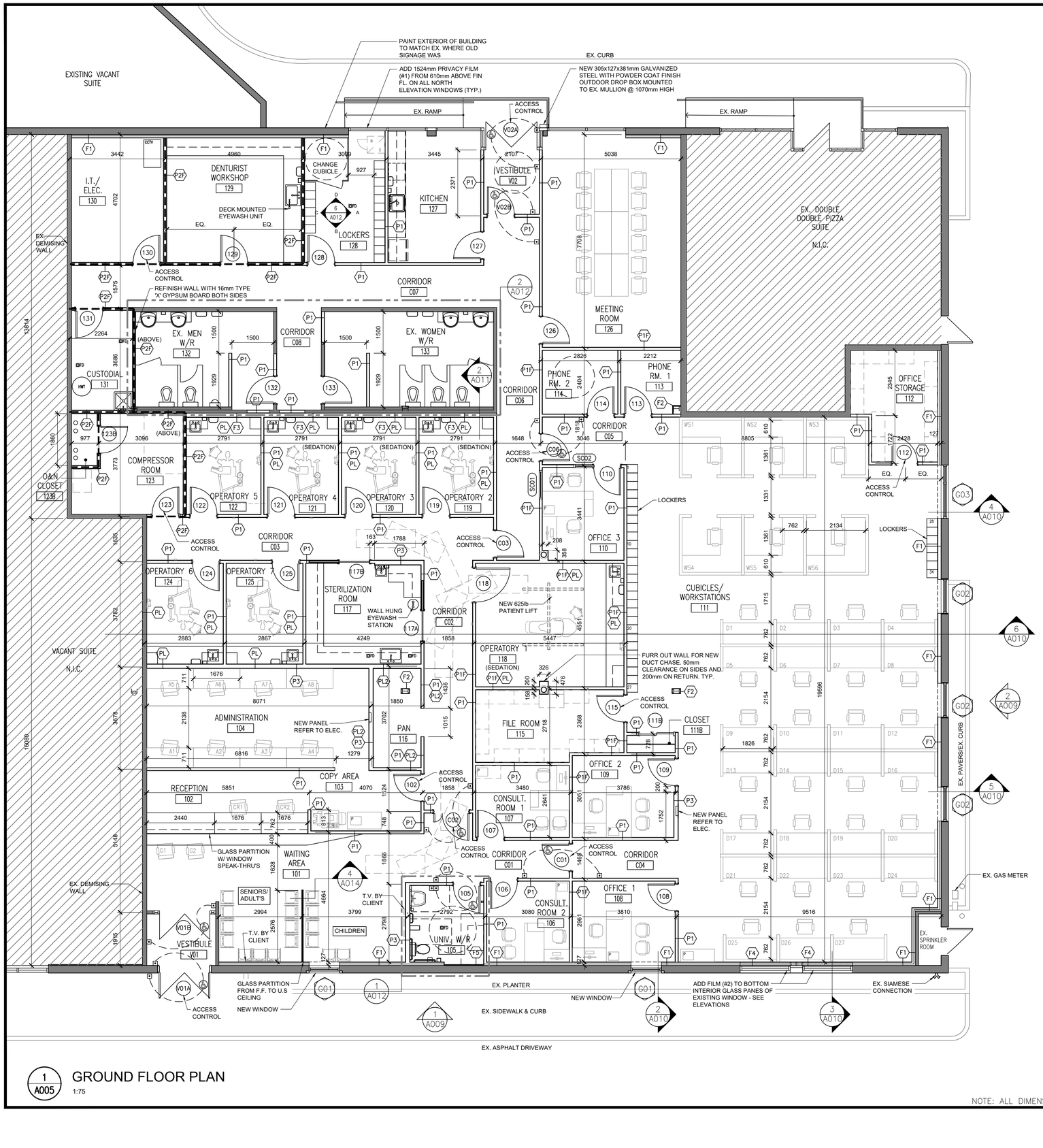


1 A005 GROUND FLOOR PLAN
1:75

NOTE: ALL DIMENSIONS ARE IN METRES UNLESS OTHERWISE NOTED.

## PARTITION TYPES SCHEDULE

| | | |
|---|---|---|
| 118 | P1 | 12.7mm GYPSUM WALL BOARD<br>92mm STEEL STUDS c/w<br>76mm MIN. SOUND ATTENUATION BATTS<br>12.7mm GYPSUM WALL BOARD |
| | P1F | SIMILAR TO P1, BUT P1F TO EXTEND TO U/S OF DECK |
| 124 | P2F | 15.8mm TYPE 'X' GYP. BOARD<br>92mm STEEL STUDS c/w<br>89mm MIN. SOUND ATTENUATION BATTS<br>15.8mm TYPE 'X' GYP. BOARD<br>- 1 HOUR RATED - STC 48<br>- DES. No. UL419 |
| | | EXTEND TO U/S OF DECK & FIRE SEAL ALL JOINTS |
| 166 | P3 | 12.7mm GYPSUM WALL BOARD<br>140mm STEEL STUDS c/w<br>152mm MIN. SOUND ATTENUATION BATTS<br>12.7mm GYPSUM WALL BOARD |
| | PL | -0.8mm MEDICAL GRADE LEAD FROM 500mm ABOVE FINISHED FLOOR TO 2000mm A.F.F. min. BEHIND GYPSUM BOARD. |
| | PL2 | -1.6mm MEDICAL GRADE LEAD, OR TWO LAYERS 0.8mm FROM 500mm ABOVE FINISHED FLOOR TO 2000mm A.F.F. min. BEHIND GYPSUM BOARD. |

## FURRING TYPES SCHEDULE

| | | |
|---|---|---|
| 122 | F1 | 50mm AIR SPACE.<br>64mm STEEL STUDS @ 610mm O.C.<br>SPRAY FOAM INSULATION<br>6mil VAPOUR BARRIER<br>13mm GYPSUM BOARD |
| 51 | F2 | 38mm STEEL STUDS @ FLANGE ENDS OF COLUMN<br>13mm GYPSUM BOARD |
| 153 | F3 | 140mm STEEL STUDS @ 610mm O.C.<br>13mm GYPSUM BOARD |
| 77 | F4 | 64mm STEEL STUDS @ 610mm O.C.<br>13mm GYPSUM BOARD<br>FILL VOID SOUND ATTENUATION BATTS |
| 35 | F5 | 22mm RESILIENT HAT CHANNELS 610mm O.C.<br>13mm GYPSUM BOARD |

PARTITION, FURRING & GENERAL NOTES:

1. UNLESS OTHERWISE NOTED ALL PARTITIONS TO TERMINATE AT +3300mm A.F.F.
2. ALL SWING DOORS TO BE 100mm FROM ADJACENT WALL UNLESS DIMENSIONED OTHERWISE.
3. REFER TO DENTAL CONSULTANT DRAWINGS FOR ADDITIONAL PLYWOOD BACKING SUPPORT & EXTRA FRAMING REQUIREMENTS AT ORAL X-RAY SUPPORT LOCATION.
4. PROVIDE BLOCKING AS REQUIRED IN WALLS TO SUPPORT NEW MILLWORK AND WALL MOUNTED LAPTOP ARM BRACKET. REFER TO FINISH PLAN A-007.
5. PATCH ALL FLOORS WHERE SAWCUT FOR NEW MECHANICAL & ELECTRICAL SERVICES. REFER TO STRUCTURAL FOR DETAIL.

## FLOOR PLAN NOTATION LEGEND

- CORRIDOR / XXX — ROOM NAME & NUMBER
- P1 — INTERIOR PARTITION OR FURRING TYPE (REFER TO PARTITION SCHEDULE)
- 101 — DOOR NUMBER (REFER TO DOOR SCHEDULE)
- SC01 — SCREEN NUMBER (REFER TO SCREEN ELEVATIONS)
- PB — BARRIER FREE DOOR OPERATOR PUSH BUTTON
- D / C / A / B / XX / AXXX — INTERIOR ELEVATION REFERENCE NUMBER
- XX / AXXX — DETAIL REFERENCE NUMBER
- XX / AXXX — ELEVATION REFERENCE NUMBER
- XX / AXXX — SECTION REFERENCE NUMBER
- HATCHED AREA DENOTES NOT IN CONTRACT

ALL MEASUREMENTS ARE TO BE VERIFIED BY THE CONTRACTOR ON SITE AND ANY DISCREPANCIES ARE TO BE REPORTED BEFORE PROCEEDING WITH THE WORK. THE REGION OF DURHAM ASSUMES NO RESPONSIBILITY FOR THE ACCURACY OF THE LOCATION OF EXISTING SERVICES AS INDICATED ON THIS DRAWING. DO NOT SCALE DRAWINGS.

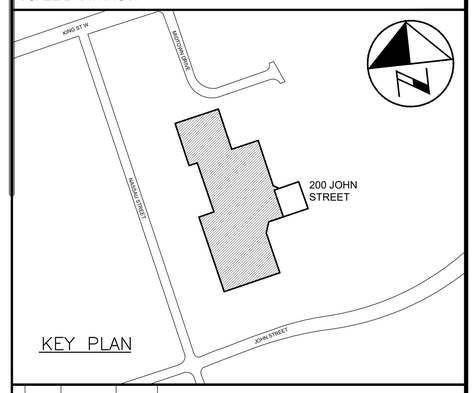


CONSULTANT REVISIONS

| NO. | DATE | NAME | REVISIONS |
|---|---|---|---|

PRIME CONSULTANT

BARRY BRYAN ASSOCIATES
Architects
Engineers
Project Managers
250 Water St.
Suite 201
Whitby, Ontario
L1N 0G5
Tel: (905) 666-5252
Fax: (905) 666-5256
e-mail: bba@bba-archeng.com

ONTARIO ASSOCIATION OF ARCHITECTS — WILLIAM WEIMA — LICENCE 4910 — REVOKED FOR PUBLIC USE FEB 17/21

SUB-CONSULTANT

| | |
|---|---|
| DESIGN BY: WW | SCALE 1:75 |
| DRAWN BY: KM | DATE: 2021-02-12 |
| CHECKED BY: CM | CONSULTANT PROJECT NO. 20060 |
| APPROVED BY: WW | |

CONTRACT REVISIONS

| NO. | DATE | NAME | REVISIONS |
|---|---|---|---|
| 5 | FEB 12/21 | BBA | ISSUED FOR PERMIT & TENDER |
| 4 | JAN 13/21 | BBA | RE-ISSUED FOR 90% CLIENT REVIEW |
| 3 | NOV 5/20 | BBA | ISSUED FOR 90% CLIENT REVIEW |
| 2 | AUG 14/20 | BBA | ISSUED FOR REVISED 60% CLIENT REVIEW |
| 1 | MAY 27/20 | BBA | ISSUED FOR 60% CLIENT REVIEW |

DURHAM REGION

THE REGIONAL MUNICIPALITY OF DURHAM
WORKS DEPARTMENT
DESIGN, CONSTRUCTION & ASSET MANAGEMENT

# RELOCATION OF DENTAL CLINIC TO 200 JOHN ST., OSHAWA

## GROUND FLOOR PLAN

| PROPERTY NO. | FACILITY CODE | FACILITIES PROJECT NO. |
|---|---|---|
| N/A | LEA-O-07 | LEA-O-07-19-01 |
| CONTRACT NO. | DRAWING NO. | SHEET NO. |
| T-1032-2021 | A-005 | 005 |

\\files\vProject Data\2020\20060 Durham Region-New Dental Clinic, 200 John St. W, Oshawa\Drawings\Current\20060 A-005 NEW.dwg

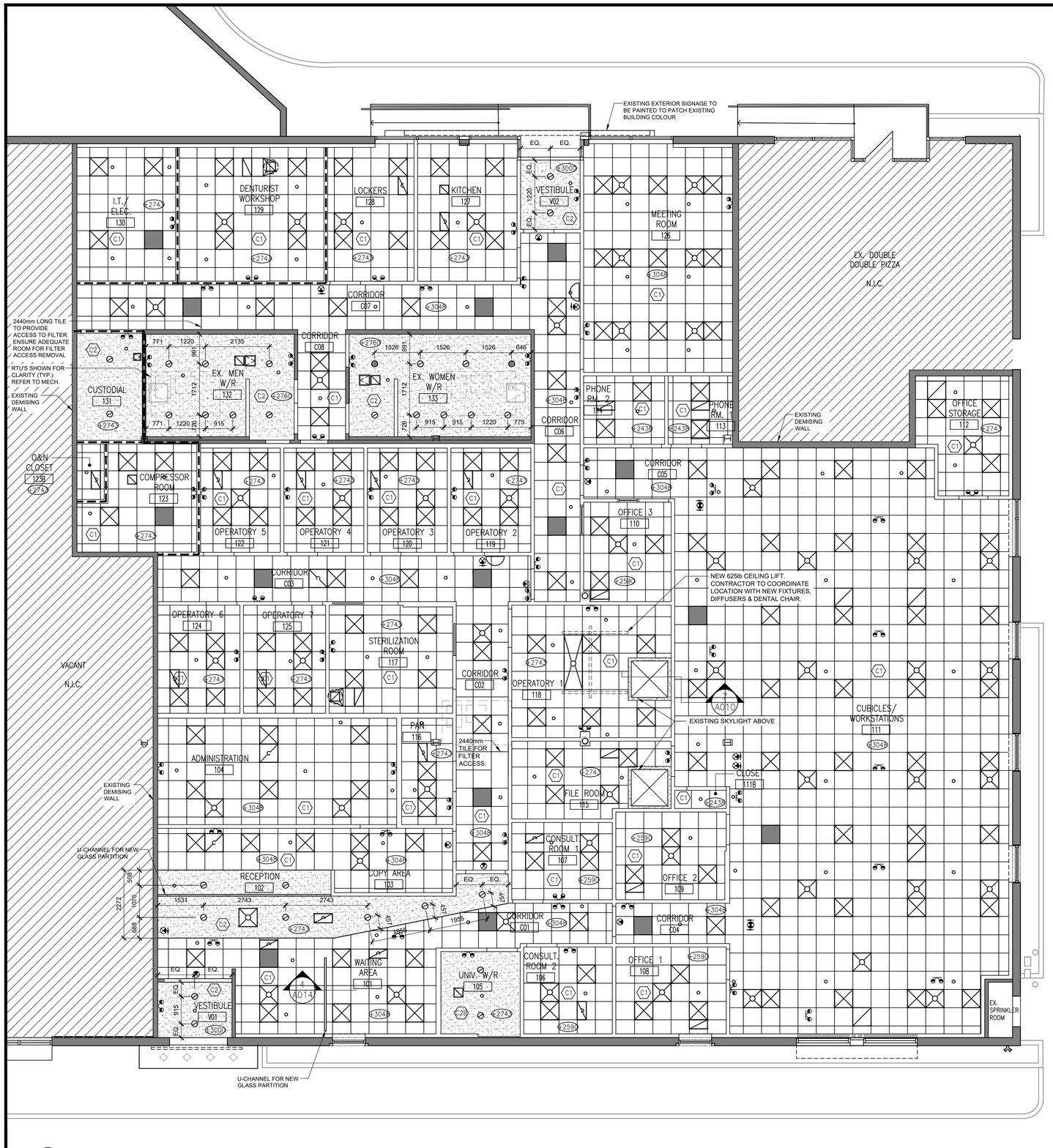


1 A006 REFLECTED CEILING PLAN
1:75

NOTE: ALL DIMENSIONS ARE IN METRES UNLESS OTHERWISE NOTED.

NORTH

## CEILING TYPES SCHEDULE

- C1 — 610 x 1220 mm ACOUSTIC CEILING TILE METAL SUSPENSION FRAMING SYSTEM
- C2 — 13mm GYPSUM BOARD 22mm METAL FURRING CHANNEL 41mm METAL STUD FRAMING SUSPENDED FROM STRUCTURE
- C2B — 13mm GYPSUM BOARD 22mm METAL FURRING CHANNEL 41mm METAL STUD FRAMING SUSPENDED FROM STRUCTURE W/ BATT INSULATION ON TOP

## CEILING FIXTURE LEGEND

- NEW 610mm X 610mm FLUORESCENT LIGHTING AS PER ELEC.
- UPGRADED RECESSED FLUORESCENT LIGHTING AS PER ELEC. NEW LIGHT COVER TO BE INSTALLED ON EXISTING METAL SUPPORT BRACKETS (REFER TO SPEC.)
- NEW RECESSED/PENDANT DOWNLIGHT AS PER ELEC.
- UPGRADED POT LIGHT LAMPS
- EXISTING EXTERIOR POT LIGHT
- CEILING DIFFUSERS, REGISTERS & GRILLES AS PER MECH
- EXHAUST FAN - AS PER MECH
- EMERGENCY LIGHTING - AS PER ELEC
- EXIT SIGNAGE - AS PER ELEC
- SPRINKLER HEAD AS PER MECH
- SAFETY SECURITY MIRROR 180° HALF DOME
- NEW ACCESS PANEL - COORDINATE LOCATION WITH MECHANICAL

## FLOOR PLAN NOTATION LEGEND

- CORRIDOR XXX — ROOM NAME & NUMBER
- 3000 — CEILING HEIGHT
- XX A4XX — SECTION REFERENCE NUMBER
- HATCHED AREA DENOTES NOT IN CONTRACT

ALL MEASUREMENTS ARE TO BE VERIFIED BY THE CONTRACTOR ON SITE AND ANY DISCREPANCIES ARE TO BE REPORTED BEFORE PROCEEDING WITH THE WORK. THE REGION OF DURHAM ASSUMES NO RESPONSIBILITY FOR THE ACCURACY OF THE LOCATION OF EXISTING SERVICES AS INDICATED ON THIS DRAWING. DO NOT SCALE DRAWINGS.

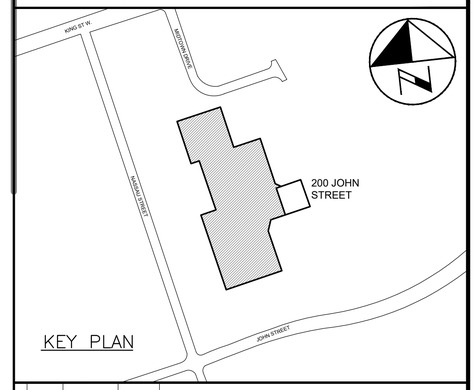


CONSULTANT REVISIONS

| NO. | DATE | NAME | REVISIONS |
|---|---|---|---|

PRIME CONSULTANT

BARRY BRYAN ASSOCIATES
Architects
Engineers
Project Managers
250 Water St.
Suite 201
Whitby, Ontario
L1N 0G5
Tel: (905) 666-5252
Fax: (905) 666-5256
e-mail: bba@bba-archeng.com

ONTARIO ASSOCIATION OF ARCHITECTS — WILLIAM WEIMA — LICENCE 4910 — REG'D FEB 17/21

SUB-CONSULTANT

| | |
|---|---|
| DESIGN BY: WW | SCALE AS NOTED |
| DRAWN BY: KM | DATE: 2021-02-25 |
| CHECKED BY: CM | CONSULTANT PROJECT NO. 20060 |
| APPROVED BY: WW | |

CONTRACT REVISIONS

| NO. | DATE | NAME | REVISIONS |
|---|---|---|---|
| 5 | FEB 12/21 | BBA | ISSUED FOR PERMIT & TENDER |
| 4 | JAN 13/21 | BBA | RE-ISSUED FOR 90% CLIENT REVIEW |
| 3 | NOV 5/20 | BBA | ISSUED FOR 90% CLIENT REVIEW |
| 2 | AUG 14/20 | BBA | ISSUED FOR REVISED 60% CLIENT REVIEW |
| 1 | MAY 27/20 | BBA | ISSUED FOR 60% CLIENT REVIEW |

THE REGIONAL MUNICIPALITY OF DURHAM
WORKS DEPARTMENT
DESIGN, CONSTRUCTION & ASSET MANAGEMENT

# RELOCATION OF DENTAL CLINIC TO 200 JOHN ST., OSHAWA

## REFLECTED CEILING PLAN

| PROPERTY NO. | FACILITY CODE | FACILITIES PROJECT NO. |
|---|---|---|
| N/A | LEA-O-07 | LEA-O-07-19-01 |
| CONTRACT NO. | DRAWING NO. | SHEET NO. |
| T-1032-2021 | A-006 | 006 |

I:\files\vProject Data\2020\20060 Durham Region-New Dental Clinic. 200 John St. W. Oshawa\Drawings\Current\20060 A-006 NEW RCP.dwg

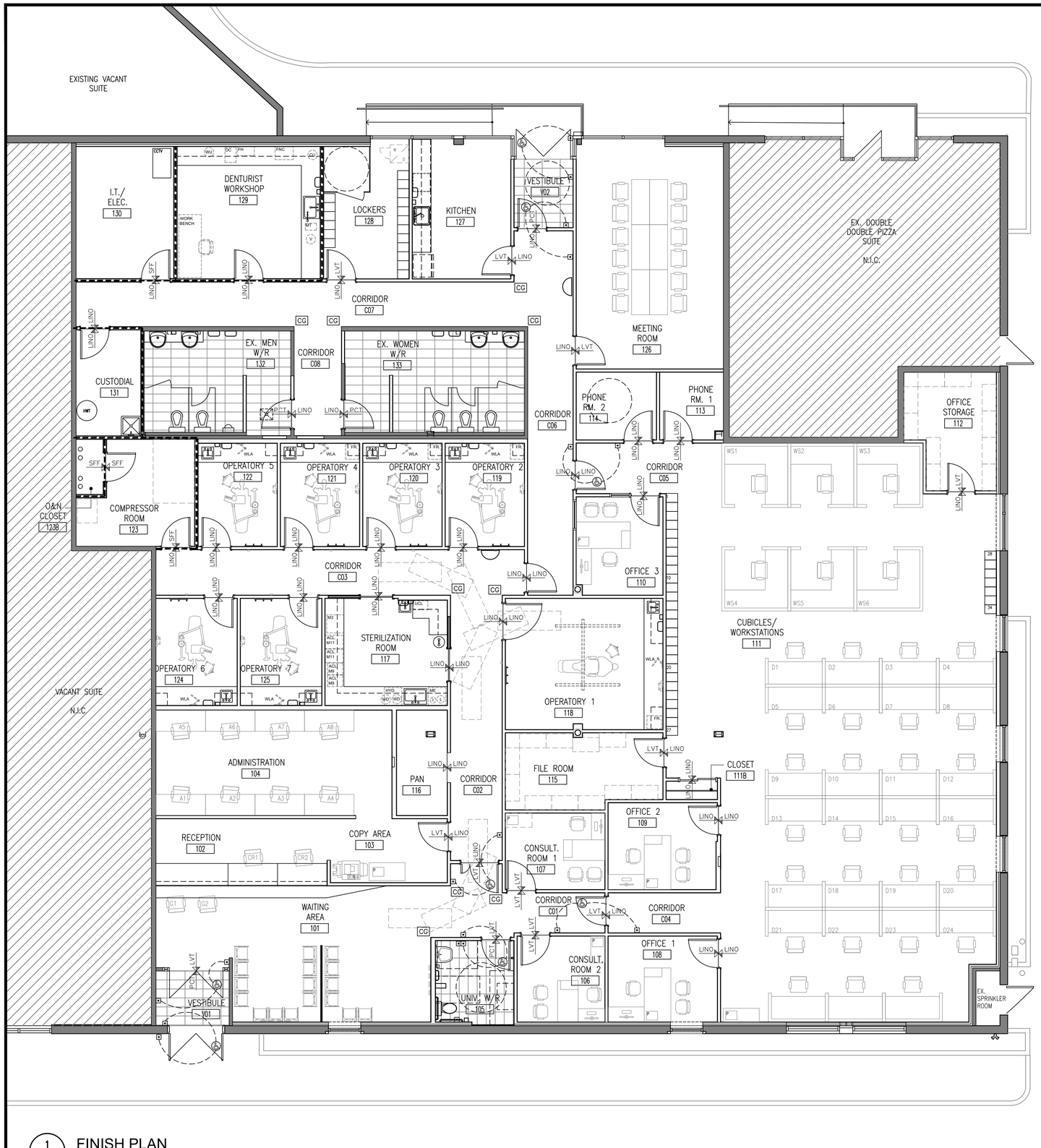


1 / A007 FINISH PLAN
1:75

NOTE: ALL DIMENSIONS ARE IN METRES UNLESS OTHERWISE NOTED.

NORTH

## FLOOR PLAN NOTATION LEGEND

| | |
|---|---|
| CORRIDOR XXX | ROOM NAME & NUMBER |
| | EQUIPMENT OUTLINE |
| CT / RST | FLOOR FINISH TYPE (REFER TO ROOM FINISH SCHEDULE) |
| CG | CORNER GUARD |
| | SAFETY SECURITY MIRROR 180° HALF DOME |
| | STAINLESS STEEL COAT HOOK |
| | SOAP AND PAPER TOWEL DISPENSER SUPPLIED BY OWNER INSTALLED BY CONTRACTOR |
| | HATCHED AREA DENOTES NOT IN CONTRACT |

## FLOOR ABBREVIATIONS

LINO - LINOLEUM

LVT - LUXURY VINYL TILE

PCT - PORCELAIN CERAMIC TILE

SFF - STATIC FREE DISSEMINATING

NOTE: COLOURS TO BE SELECTED AND COORDINATED WITH CLIENT

## EQUIPMENT ABBREVIATIONS

| | |
|---|---|
| A# | ASSISTANT DESK |
| ACL M11 | AUTOCLAVE M11 |
| ACL M9 | AUTOCLAVE M9 |
| CU | CURING UNIT (not to scale) |
| DC | DUST COLLECTOR |
| D# | DESK |
| FH | FUME HOOD (not to scale) |
| FNC | FURNACE (not to scale) |
| FR. | FRIDGE (COUNTERTOP) |
| HYD. | HYDRIM |
| I | INCUBATOR (not to scale) |
| L | LUBRICATOR (not to scale) |
| M3 | AUTOMATIC STERILIZER |
| ME | MEILE (HYDRIM) |
| MT | MODEL TRIMMER (not to scale) |
| UCL | ULTRASONIC CLEANING SYSTEM |
| V | VIBRATOR (not to scale) |
| WD | WATER DISTILLER |
| WLA | WALL-MOUNT LAPTOP ARM |
| WS | WORKSTATION |
| WU | WAXING UNIT (not to scale) |

NOTE: EQUIPMENT TO BE PROVIDED BY OTHERS

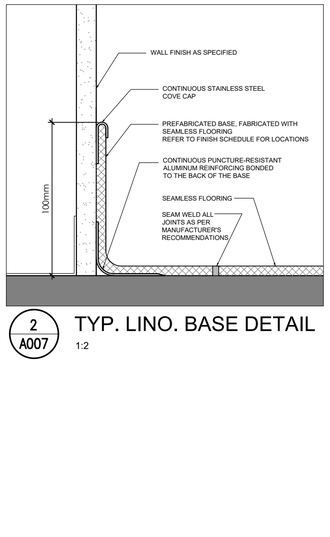


2 / A007 TYP. LINO. BASE DETAIL
1:2

ALL MEASUREMENTS ARE TO BE VERIFIED BY THE CONTRACTOR ON SITE AND ANY DISCREPANCIES ARE TO BE REPORTED BEFORE PROCEEDING WITH THE WORK. THE REGION OF DURHAM ASSUMES NO RESPONSIBILITY FOR THE ACCURACY OF THE LOCATION OF EXISTING SERVICES AS INDICATED ON THIS DRAWING. DO NOT SCALE DRAWINGS.

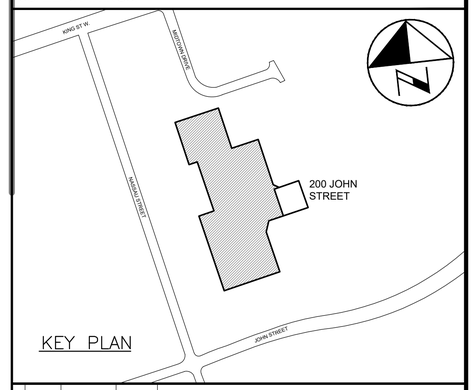


CONSULTANT REVISIONS

| NO. | DATE | NAME | REVISIONS |
|---|---|---|---|

PRIME CONSULTANT

BARRY BRYAN ASSOCIATES
Architects
Engineers
Project Managers
250 Water St.
Suite 201
Whitby, Ontario
L1N 0G5
Tel: (905) 666-5252
Fax: (905) 666-5256
e-mail: bba@bba-archeng.com

ONTARIO ASSOCIATION OF ARCHITECTS — WILLIAM WEIMA — LICENCE 4010 — REVISED FEB 17/21

SUB-CONSULTANT

| | |
|---|---|
| DESIGN BY: WW | SCALE 1:75 |
| DRAWN BY: KM | DATE: 2021-02-24 |
| CHECKED BY: CM | CONSULTANT PROJECT NO. 20060 |
| APPROVED BY: WW | |

CONTRACT REVISIONS

| NO. | DATE | NAME | REVISIONS |
|---|---|---|---|
| 5 | FEB 12/21 | BBA | ISSUED FOR PERMIT & TENDER |
| 4 | JAN 13/21 | BBA | RE-ISSUED FOR 90% CLIENT REVIEW |
| 3 | NOV 5/20 | BBA | ISSUED FOR 90% CLIENT REVIEW |
| 2 | AUG 14/20 | BBA | ISSUED FOR REVISED 60% CLIENT REVIEW |
| 1 | MAY 27/20 | BBA | ISSUED FOR 60% CLIENT REVIEW |

THE REGIONAL MUNICIPALITY OF DURHAM
WORKS DEPARTMENT
DESIGN, CONSTRUCTION & ASSET MANAGEMENT

# RELOCATION OF DENTAL CLINIC TO 200 JOHN ST., OSHAWA

## FINISH & EQUIPMENT PLAN

| PROPERTY NO. | FACILITY CODE | FACILITIES PROJECT NO. |
|---|---|---|
| N/A | LEA-O-07 | LEA-O-07-19-01 |
| CONTRACT NO. | DRAWING NO. | SHEET NO. |
| T-1032-2021 | A-007 | 007 |

\\fileserv\Project Data\2020\20060 Durham Region-New Dental Clinic, 200 John St. W, Oshawa\Drawings\Current\20060 A-007 FINISH PLAN.dwg

NOTES:
1. REFER TO MECHANICAL DRAWINGS FOR LOCATIONS OF NEW EXHAUST TERMINATIONS & ROOF PENETRATIONS.
2. PENETRATIONS TO BE MODIFIED TO SUIT NEW RTU. REFER TO MECHANICAL.
3. PATCH AND REPAIR ROOFING TO MATCH EXISTING AS REQ. FOR ALL NEW MECHANICAL PENETRATIONS.
4. CONTRACTOR TO COORDINATE NEW ROOF PENETRATION DETAILS WITH MECHANICAL DRAWINGS IN ORDER TO ACHIEVE MOST STRINGENT AND COMPATIBLE CONSTRUCTION.

NORTH

NEW EXHAUST FAN PENETRATION AS PER MECH. CONTRACTOR TO CUT BACK EX. ROOFING AS REQ. FOR NEW PENETRATION AND REPAIR ROOFING TO MATCH EXISTING.

NEW CONDENSING UNIT AS PER MECH. CONTRACTOR TO CUT BACK EX. ROOFING AS REQ. FOR NEW PENETRATION AND REPAIR ROOFING TO MATCH EXISTING. REFER TO DETAIL 3/A008.

EXISTING TPO ROOF ASSEMBLY

EX. RTU (ADJACENT TENANT BELOW)

COORDINATE FUNCTIONALITY W/ DURHAM REGION FOR ANY REQUIRED INTERRUPTION OF SERVICE. CONTRACTOR SHALL KEEP UNIT OPERATIONAL AND ALLOW FOR EXISTING CONNECTIONS TO REMAIN.

CAREFULLY REMOVE EXISTING RTU AND STORE ON TOP OF 12m LONG STORAGE CONTAINER LOCATED ON 175 KING ST W PROPERTY. EX .CURB TO REMAIN.

NEW RTU INSTALLED ON EXISTING ROOF CURB WITH ROOF CURB ADAPTER. REFER TO MECHANICAL DRAWINGS FOR FURTHER DETAIL

RTU-2

CAREFULLY REMOVE EXISTING RTU AND STORE ON TOP OF 12m LONG STORAGE CONTAINER LOCATED ON 175 KING ST W PROPERTY. EX .CURB TO REMAIN.

NEW RTU INSTALLED ON EXISTING ROOF CURB WITH ROOF CURB ADAPTER. REFER TO MECHANICAL DRAWINGS FOR FURTHER DETAIL

RTU-3

REMOVE EXISTING GOOSENECK AS PER MECHANICAL. PATCH AND REPAIR ROOF TO MATCH EXISTING.

NEW CONDENSING UNIT AS PER MECH. CONTRACTOR TO CUT BACK EX. ROOFING AS REQ. FOR NEW PENETRATION AND REPAIR ROOFING TO MATCH EXISTING. REFER TO DETAIL 3/A008.

CAREFULLY REMOVE EXISTING RTU AND STORE ON TOP OF 12m LONG STORAGE CONTAINER LOCATED ON 175 KING ST W PROPERTY. EX .CURB TO REMAIN.

NEW RTU INSTALLED ON EXISTING ROOF CURB WITH ROOF CURB ADAPTER. REFER TO MECHANICAL DRAWINGS FOR FURTHER DETAIL

RTU-1

EX. SKYLIGHT

EX. SKYLIGHT

COORDINATE FUNCTIONALITY W/ DURHAM REGION FOR ANY REQUIRED INTERRUPTION OF SERVICE. CONTRACTOR SHALL KEEP UNIT OPERATIONAL AND ALLOW FOR EXISTING CONNECTIONS TO REMAIN.

NEW EXHAUST FAN PENETRATION AS PER MECH. CONTRACTOR TO CUT BACK EX. ROOFING AS REQ. FOR NEW PENETRATION AND REPAIR ROOFING TO MATCH EXISTING.

EX. RTU (ADJACENT TENANT BELOW)

EXISTING TPO ROOF ASSEMBLY

+4724 +6728 +2972

LINE OF EX. AWNING BELOW

LINE OF EX. CANOPY BELOW

E F G H H1 H2 4a 4 4b 3 2 1

1 A008 ROOF PLAN 1:75

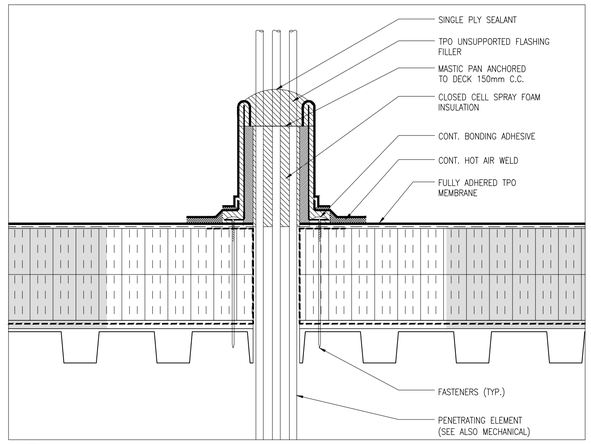


4 A008 TYP. ROOF PENETRATION DETAIL 1:5

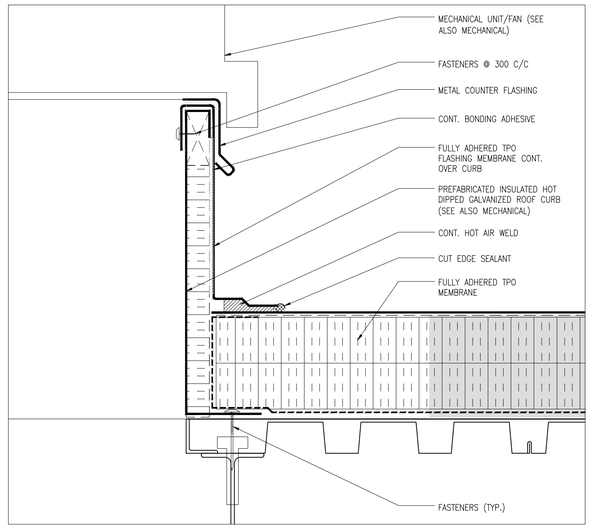


3 A008 TYP. ROOF CURB DETAIL 1:5

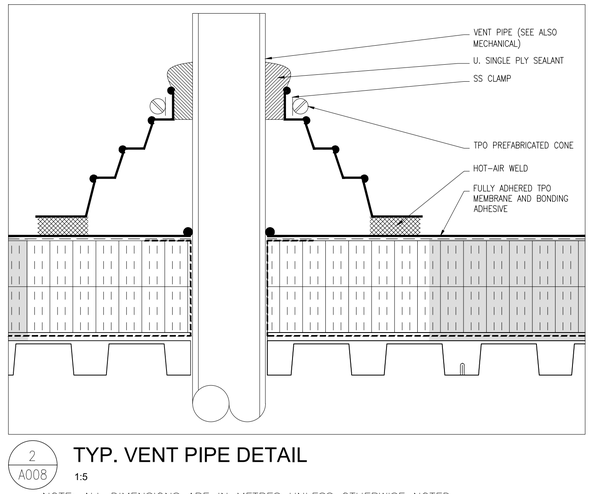


2 A008 TYP. VENT PIPE DETAIL 1:5

NOTE: ALL DIMENSIONS ARE IN METRES UNLESS OTHERWISE NOTED.

ALL MEASUREMENTS ARE TO BE VERIFIED BY THE CONTRACTOR ON SITE AND ANY DISCREPANCIES ARE TO BE REPORTED BEFORE PROCEEDING WITH THE WORK. THE REGION OF DURHAM ASSUMES NO RESPONSIBILITY FOR THE ACCURACY OF THE LOCATION OF EXISTING SERVICES AS INDICATED ON THIS DRAWING. DO NOT SCALE DRAWINGS.

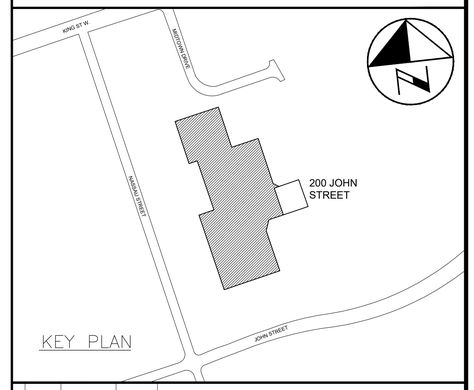


CONSULTANT REVISIONS

| NO. | DATE | NAME | REVISIONS |
|---|---|---|---|
| | | | |

PRIME CONSULTANT

BARRY BRYAN ASSOCIATES
Architects
Engineers
Project Managers
250 Water St.
Suite 201
Whitby, Ontario
L1N 0G5
Tel: (905) 666-5252
Fax: (905) 666-5256
e-mail: bba@bba-archeng.com

ONTARIO ASSOCIATION OF ARCHITECTS WILLIAM WEIMA LICENCE 4010

SUB-CONSULTANT

| | |
|---|---|
| DESIGN BY: WW | SCALE 1:75 |
| DRAWN BY: KM | DATE: 2021-02-12 |
| CHECKED BY: CM | CONSULTANT PROJECT NO. 20060 |
| APPROVED BY: WW | |

CONTRACT REVISIONS

| NO. | DATE | NAME | REVISIONS |
|---|---|---|---|
| 5 | FEB 12/21 | BBA | ISSUED FOR PERMIT & TENDER |
| 4 | JAN 13/21 | BBA | RE-ISSUED FOR 90% CLIENT REVIEW |
| 3 | NOV 5/20 | BBA | ISSUED FOR 90% CLIENT REVIEW |
| 2 | AUG 14/20 | BBA | ISSUED FOR REVISED 60% CLIENT REVIEW |
| 1 | MAY 27/20 | BBA | ISSUED FOR 60% CLIENT REVIEW |

THE REGIONAL MUNICIPALITY OF DURHAM
WORKS DEPARTMENT
DESIGN, CONSTRUCTION & ASSET MANAGEMENT

# RELOCATION OF DENTAL CLINIC TO 200 JOHN ST., OSHAWA

## ROOF PLAN

| PROPERTY NO. | FACILITY CODE | FACILITIES PROJECT NO. |
|---|---|---|
| N/A | LEA-O-07 | LEA-O-07-19-01 |
| CONTRACT NO. | DRAWING NO. | SHEET NO. |
| T-1032-2021 | A-008 | 008 |

\\fileserv\Project Data\2020\20060 Durham Region-New Dental Clinic, 200 John St. W, Oshawa\Drawings\Current\20060 A-008 ROOF PLAN.dwg

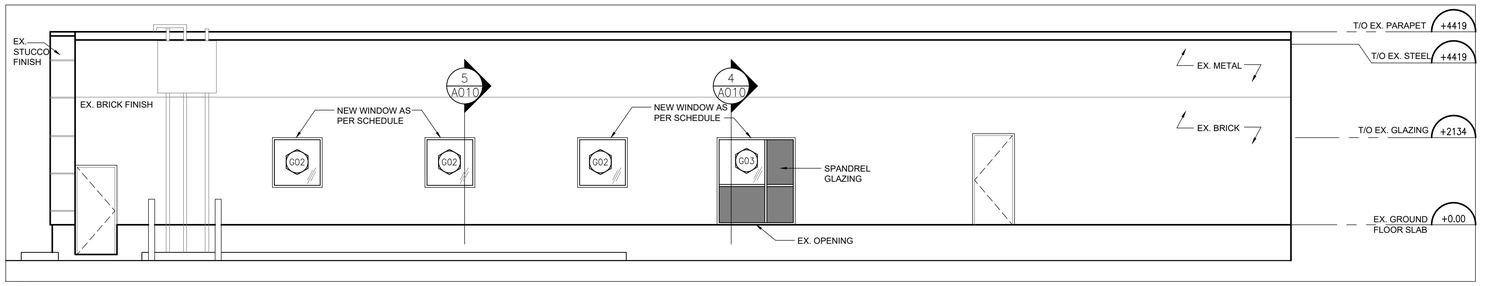


4 A009 EAST ELEVATION

1:75

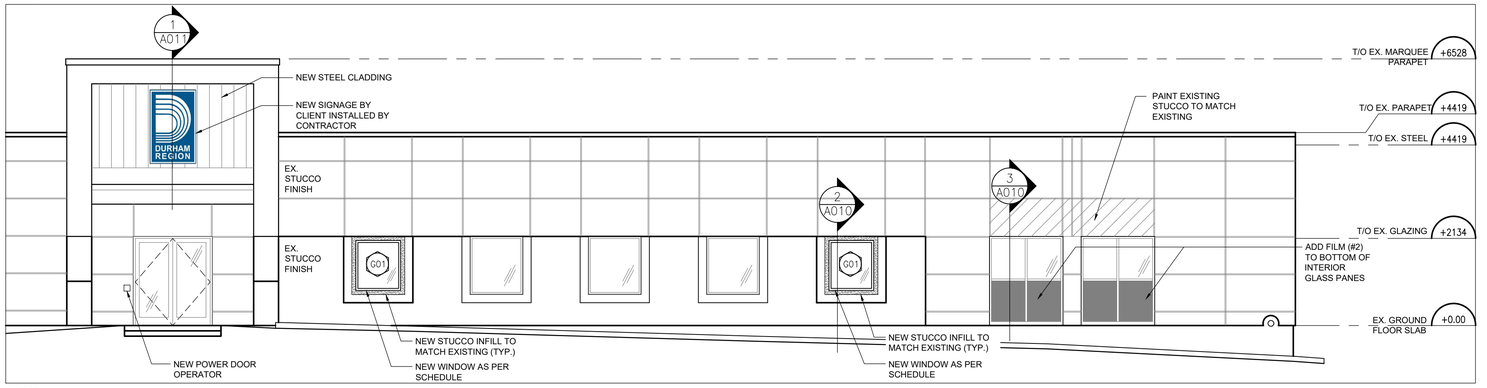


3 A009 SOUTH ELEVATION

1:75

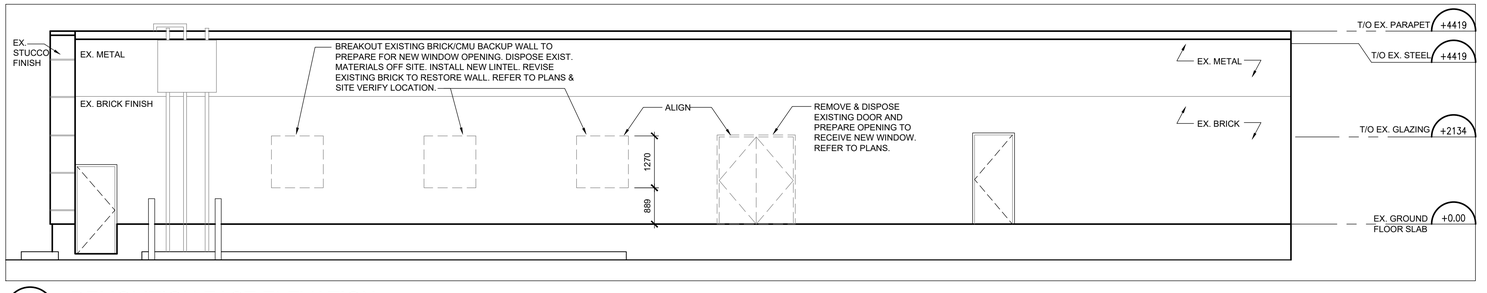


2 A009 DEMOLITION EAST ELEVATION

1:75

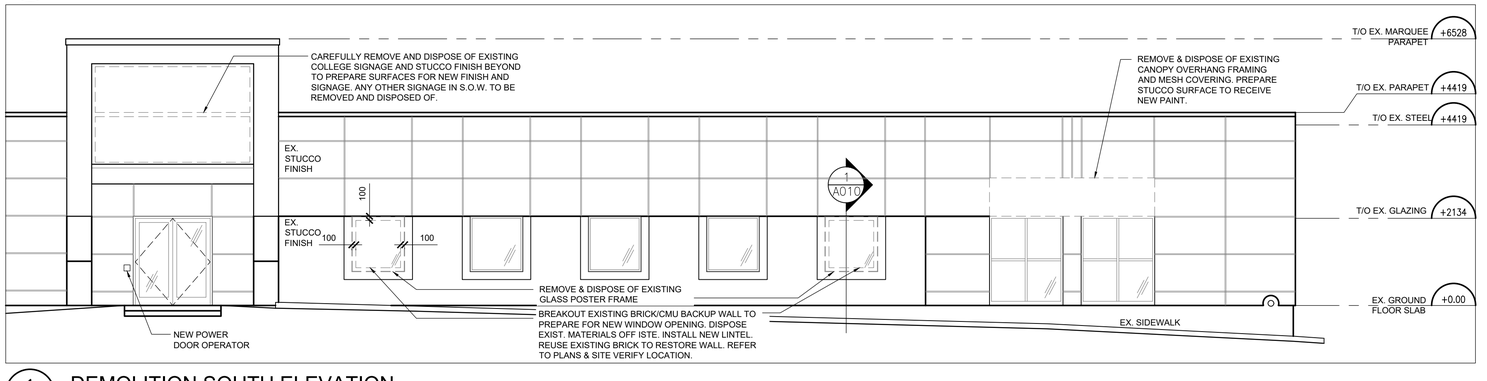


1 A009 DEMOLITION SOUTH ELEVATION

1:75

NOTE: ALL DIMENSIONS ARE IN METRES UNLESS OTHERWISE NOTED.

ALL MEASUREMENTS ARE TO BE VERIFIED BY THE CONTRACTOR ON SITE AND ANY DISCREPANCIES ARE TO BE REPORTED BEFORE PROCEEDING WITH THE WORK. THE REGION OF DURHAM ASSUMES NO RESPONSIBILITY FOR THE ACCURACY OF THE LOCATION OF EXISTING SERVICES AS INDICATED ON THIS DRAWING. DO NOT SCALE DRAWINGS.

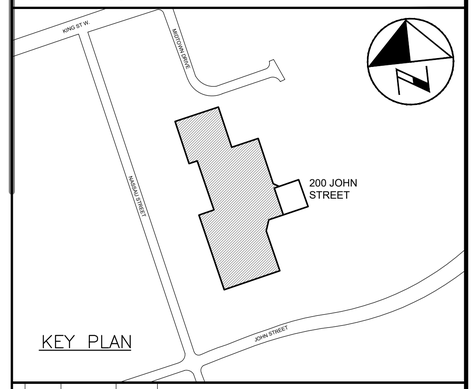


CONSULTANT REVISIONS

| NO. | DATE | NAME | REVISIONS |
|---|---|---|---|
| | | | |

PRIME CONSULTANT

BARRY BRYAN ASSOCIATES
Architects
Engineers
Project Managers
250 Water St.
Suite 201
Whitby, Ontario
L1N 0G5
Tel: (905) 666-5252
Fax: (905) 666-5256
e-mail: bba@bba-arcneng.com

ONTARIO ASSOCIATION OF ARCHITECTS
WILLIAM WEIMA
LICENCE 4910

SUB-CONSULTANT

| | |
|---|---|
| DESIGN BY: WW | SCALE 1:75 |
| DRAWN BY: KM | DATE: 2021-03-08 |
| CHECKED BY: CM | CONSULTANT PROJECT NO. 20060 |
| APPROVED BY: WW | |

CONTRACT REVISIONS

| NO. | DATE | NAME | REVISIONS |
|---|---|---|---|
| | | | |
| | | | |
| | | | |
| 5 | FEB 12/21 | BBA | ISSUED FOR PERMIT & TENDER |
| 4 | JAN 13/21 | BBA | RE-ISSUED FOR 90% CLIENT REVIEW |
| 3 | NOV 5/20 | BBA | ISSUED FOR 90% CLIENT REVIEW |
| 2 | AUG 14/20 | BBA | ISSUED FOR REVISED 60% CLIENT REVIEW |
| 1 | MAY 27/20 | BBA | ISSUED FOR 60% CLIENT REVIEW |

THE REGIONAL MUNICIPALITY OF DURHAM

WORKS DEPARTMENT

DESIGN, CONSTRUCTION & ASSET MANAGEMENT

# RELOCATION OF DENTAL CLINIC TO 200 JOHN ST., OSHAWA

## DEMOLITION & NEW ELEVATIONS

| PROPERTY NO. | FACILITY CODE | FACILITIES PROJECT NO. |
|---|---|---|
| N/A | LEA-O-07 | LEA-O-07-19-01 |
| CONTRACT NO. | DRAWING NO. | SHEET NO. |
| T-1032-2021 | A-009 | 009 |

\\fileserv\Project Data\2020\20060 Durham Region-New Dental Clinic, 200 John St W, Oshawa\Drawings\Current\20060 A-009 ELEVATIONS.dwg

ALL MEASUREMENTS ARE TO BE VERIFIED BY THE CONTRACTOR ON SITE AND ANY DISCREPANCIES ARE TO BE REPORTED BEFORE PROCEEDING WITH THE WORK. THE REGION OF DURHAM ASSUMES NO RESPONSIBILITY FOR THE ACCURACY OF THE LOCATION OF EXISTING SERVICES AS INDICATED ON THIS DRAWING. DO NOT SCALE DRAWINGS.

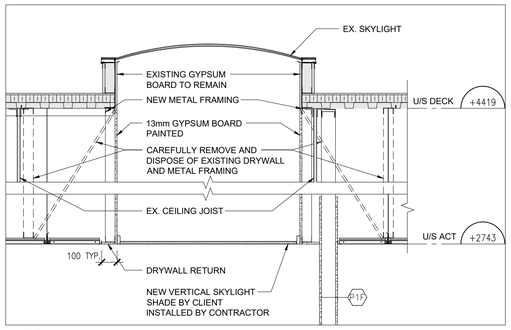


7 / A010 SECTION THROUGH SKYLIGHT
1:20

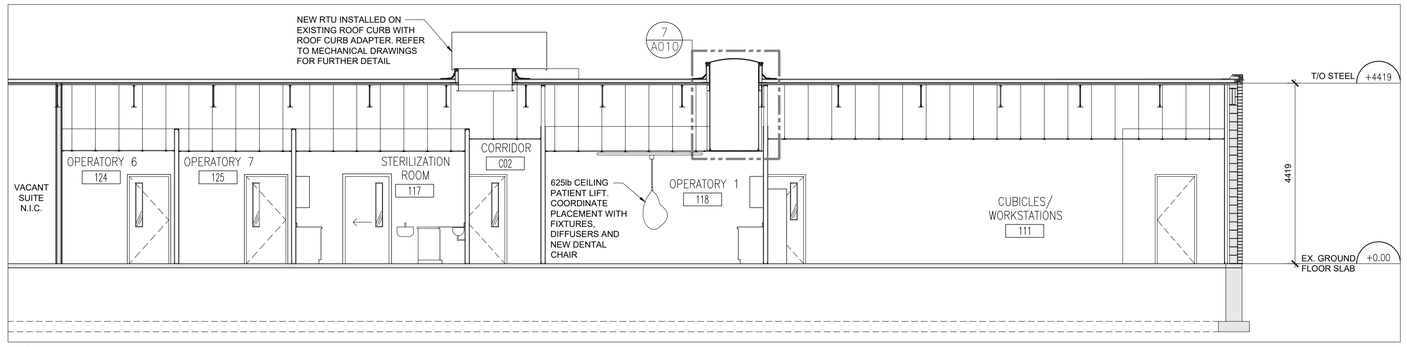


6 / A010 BUILDING SECTION
1:75

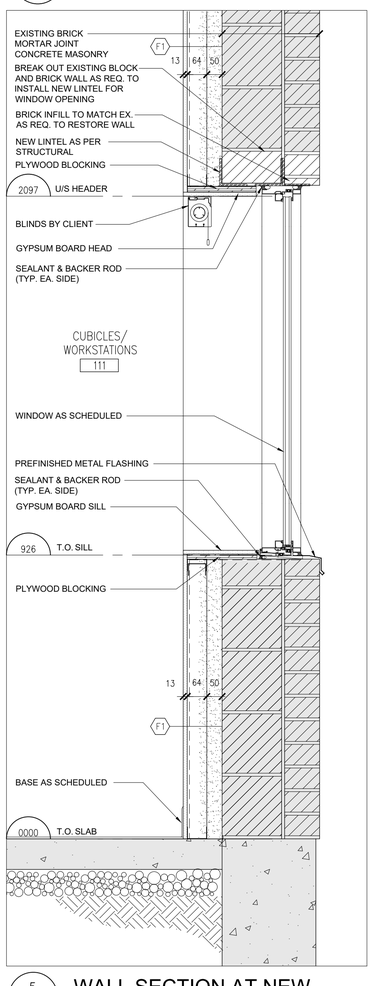


5 / A010 WALL SECTION AT NEW WINDOW 1:10

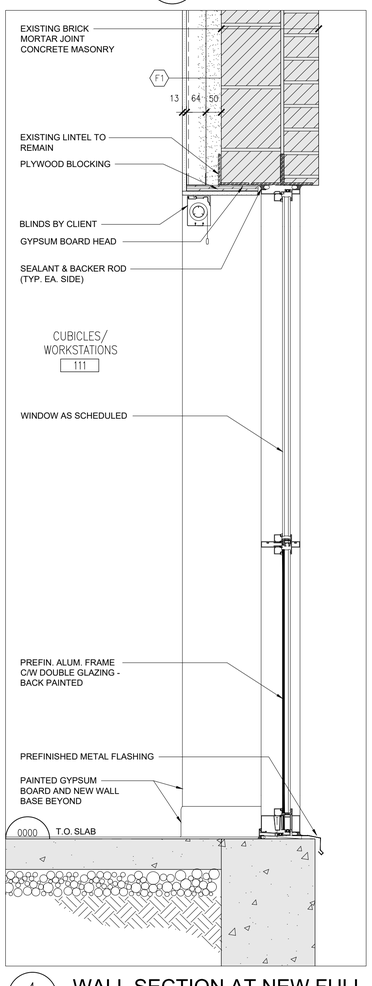


4 / A010 WALL SECTION AT NEW FULL HEIGHT WINDOW 1:10

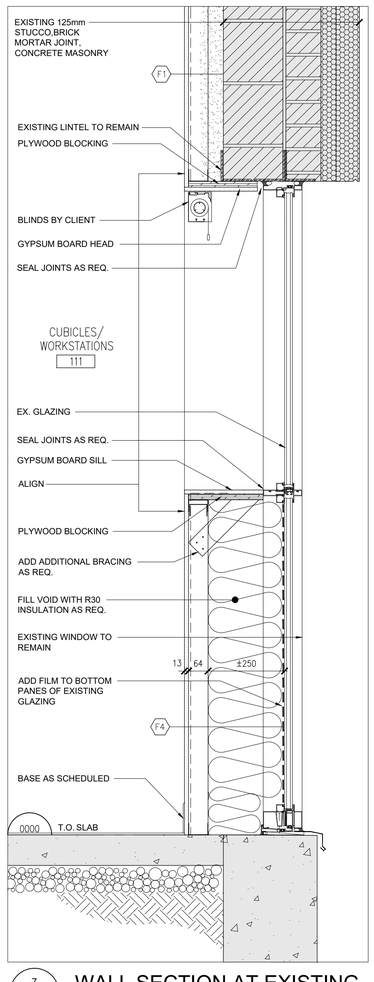


3 / A010 WALL SECTION AT EXISTING GLAZING 1:10

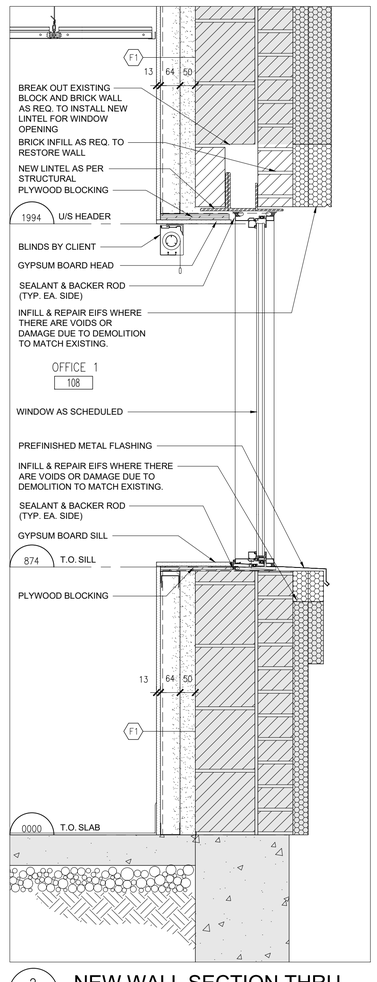


2 / A010 NEW WALL SECTION THRU EX. SIGNAGE 1:10

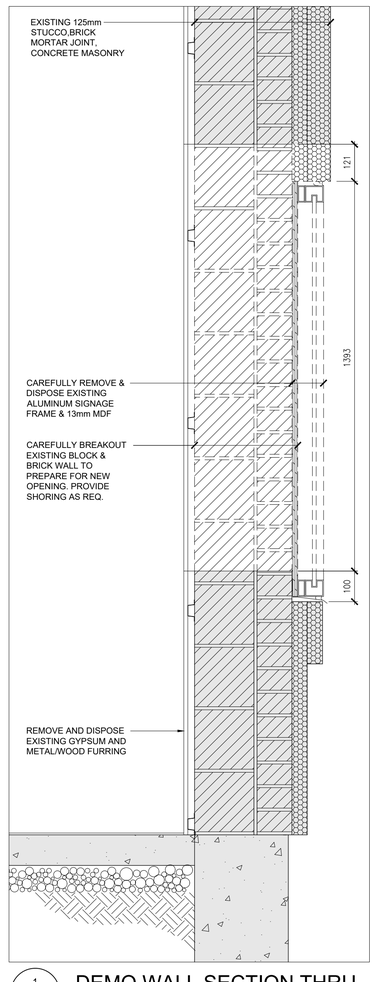


1 / A010 DEMO WALL SECTION THRU EX. SIGNAGE 1:10

NOTE: ALL DIMENSIONS ARE IN METRES UNLESS OTHERWISE NOTED.

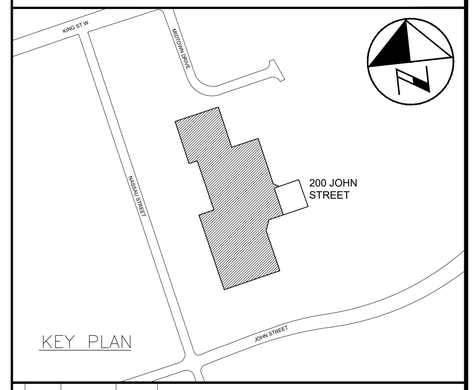


CONSULTANT REVISIONS

| NO. | DATE | NAME | REVISIONS |
|---|---|---|---|

PRIME CONSULTANT

BARRY BRYAN ASSOCIATES
Architects
Engineers
Project Managers
250 Water St.
Suite 201
Whitby, Ontario
L1N 0G5
Tel: (905) 666-5252
Fax: (905) 666-5256
e-mail: bba@bba-archeng.com

ONTARIO ASSOCIATION OF ARCHITECTS — ESTABLISHED FOR PUBLIC BENEFIT — WILLIAM WEIMA LICENCE # 4010 — REG'D 17/21

SUB-CONSULTANT

| DESIGN BY: | WW | SCALE | AS NOTED |
|---|---|---|---|
| DRAWN BY: | KM | DATE: | 2021-02-12 |
| CHECKED BY: | CM | CONSULTANT PROJECT NO. | 20060 |
| APPROVED BY: | WW | | |

CONTRACT REVISIONS

| NO. | DATE | NAME | REVISIONS |
|---|---|---|---|
| 5 | FEB 12/21 | BBA | ISSUED FOR PERMIT & TENDER |
| 4 | JAN 13/21 | BBA | RE-ISSUED FOR 90% CLIENT REVIEW |
| 3 | NOV 5/20 | BBA | ISSUED FOR 90% CLIENT REVIEW |
| 2 | AUG 14/20 | BBA | ISSUED FOR REVISED 60% CLIENT REVIEW |
| 1 | MAY 27/20 | BBA | ISSUED FOR 60% CLIENT REVIEW |

THE REGIONAL MUNICIPALITY OF DURHAM
WORKS DEPARTMENT
DESIGN, CONSTRUCTION & ASSET MANAGEMENT

# RELOCATION OF DENTAL CLINIC TO 200 JOHN ST., OSHAWA
## WALL SECTIONS & BUILDING SECTION

| PROPERTY NO. | FACILITY CODE | FACILITIES PROJECT NO. |
|---|---|---|
| N/A | LEA-0-07 | LEA-0-07-19-01 |
| CONTRACT NO. | DRAWING NO. | SHEET NO. |
| T-1032-2021 | A-010 | 010 |

\\files\Project Data\2020\20060 Durham Region-New Dental Clinic, 200 John St W, Oshawa\Drawings\Current\20060 A-010 WALL SECT.dwg

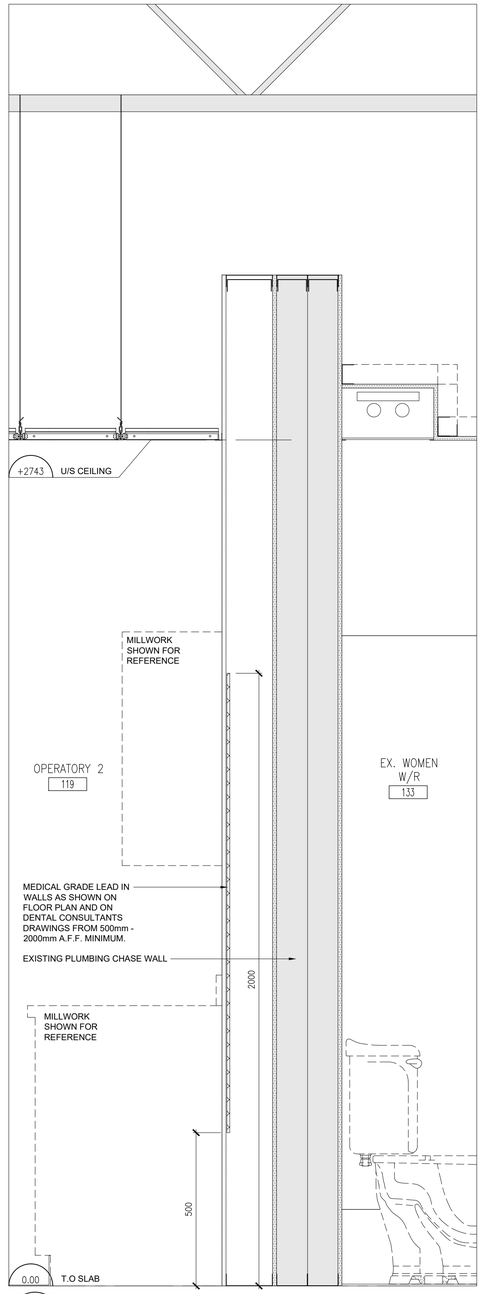


2 A011 WALL SECTION THRU OPERATORY FURRING 1:10

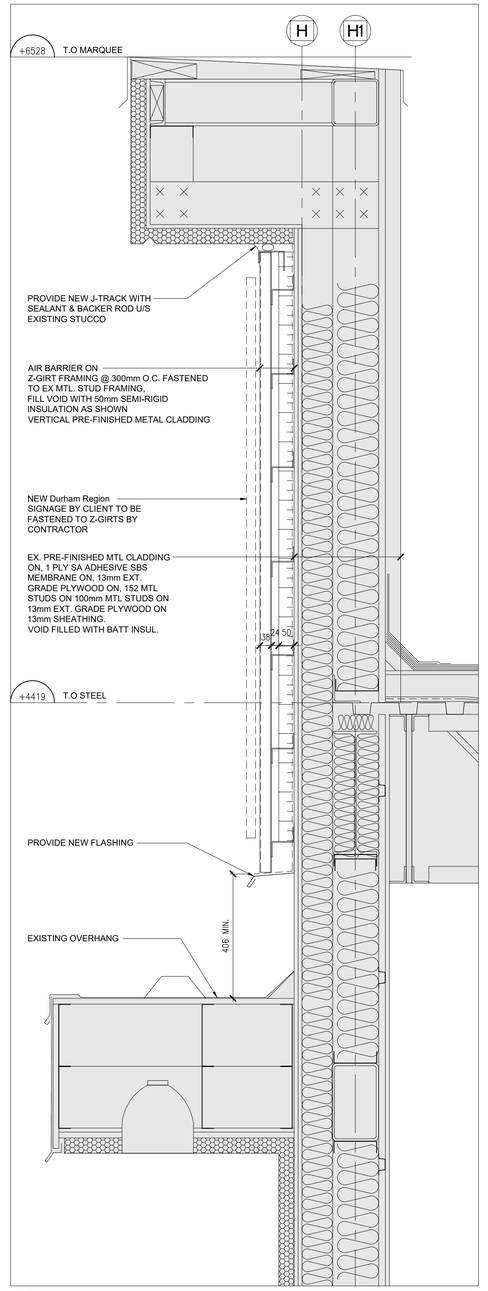


1 A011 WALL SECTION THRU NEW SIGNAGE 1:10

NOTE: ALL DIMENSIONS ARE IN METRES UNLESS OTHERWISE NOTED.

ALL MEASUREMENTS ARE TO BE VERIFIED BY THE CONTRACTOR ON SITE AND ANY DISCREPANCIES ARE TO BE REPORTED BEFORE PROCEEDING WITH THE WORK. THE REGION OF DURHAM ASSUMES NO RESPONSIBILITY FOR THE ACCURACY OF THE LOCATION OF EXISTING SERVICES AS INDICATED ON THIS DRAWING. DO NOT SCALE DRAWINGS.

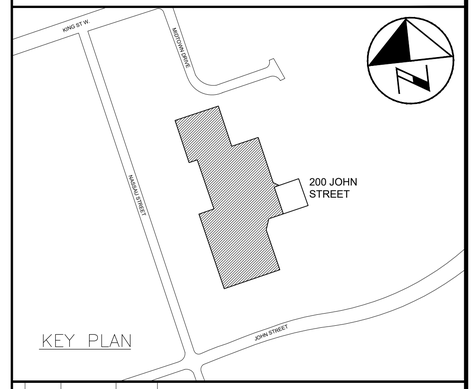


KEY PLAN

CONSULTANT REVISIONS

| NO. | DATE | NAME | REVISIONS |
|---|---|---|---|

PRIME CONSULTANT


BARRY BRYAN ASSOCIATES
Architects
Engineers
Project Managers
250 Water St.
Suite 201
Whitby, Ontario
L1N 0G5
Tel: (905) 666-5252
Fax: (905) 666-5256
e-mail: bba@bba-archeng.com


ONTARIO ASSOCIATION OF ARCHITECTS
ISSUED FOR PERMIT
WM WEIMA
FEB 17/21
WILLIAM WEIMA
LICENCE # 20060
4910

SUB-CONSULTANT

| | |
|---|---|
| DESIGN BY: WW | SCALE AS NOTED |
| DRAWN BY: KM | DATE: 2021-02-12 |
| CHECKED BY: CM | CONSULTANT PROJECT NO. 20060 |
| APPROVED BY: WW | |

CONTRACT REVISIONS

| NO. | DATE | NAME | REVISIONS |
|---|---|---|---|
| 5 | FEB 12/21 | BBA | ISSUED FOR PERMIT & TENDER |
| 4 | JAN 13/21 | BBA | RE-ISSUED FOR 90% CLIENT REVIEW |
| 3 | NOV 5/20 | BBA | ISSUED FOR 90% CLIENT REVIEW |
| 2 | AUG 14/20 | BBA | ISSUED FOR REVISED 60% CLIENT REVIEW |
| 1 | MAY 27/20 | BBA | ISSUED FOR 60% CLIENT REVIEW |

THE REGIONAL MUNICIPALITY OF DURHAM
WORKS DEPARTMENT
DESIGN, CONSTRUCTION & ASSET MANAGEMENT

# RELOCATION OF DENTAL CLINIC TO 200 JOHN ST., OSHAWA

## WALL SECTIONS

| PROPERTY NO. | FACILITY CODE | FACILITIES PROJECT NO. |
|---|---|---|
| N/A | LEA-O-07 | LEA-O-07-19-01 |
| CONTRACT NO. | DRAWING NO. | SHEET NO. |
| T-1032-2021 | A-011 | 011 |

\\filesrv\Project Data\2020\20060 Durham Region-New Dental Clinic, 200 John St. W, Oshawa\Drawings\Current\20060 A-011 WALL SECT.dwg

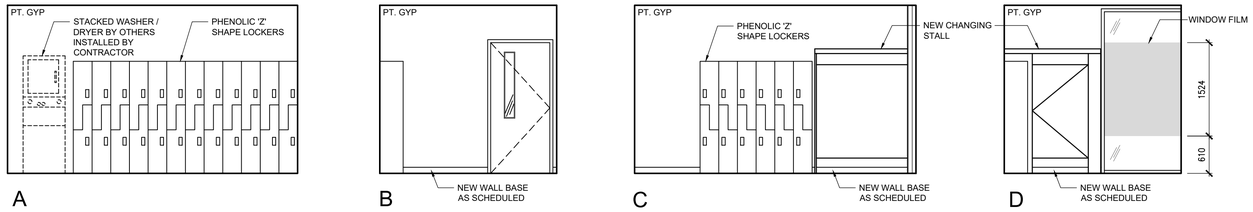


## 6 / A012 LOCKERS 128 - INTERIOR ELEVATIONS

1:50

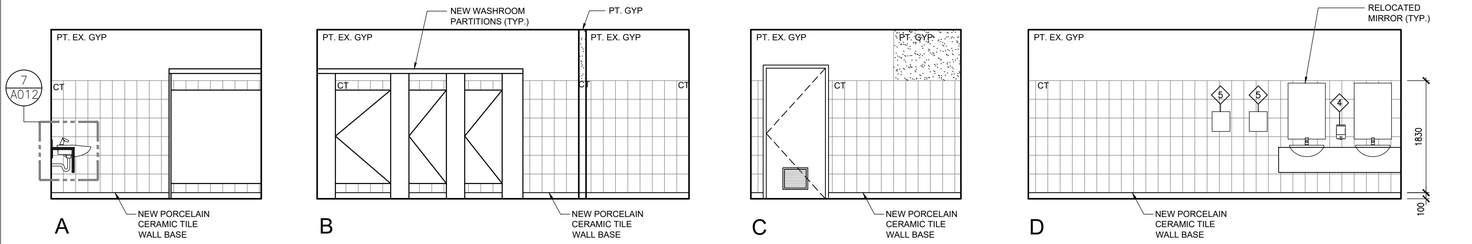


## 5 / A012 EX. WOMEN W/R 133 - INTERIOR ELEVATIONS

1:50

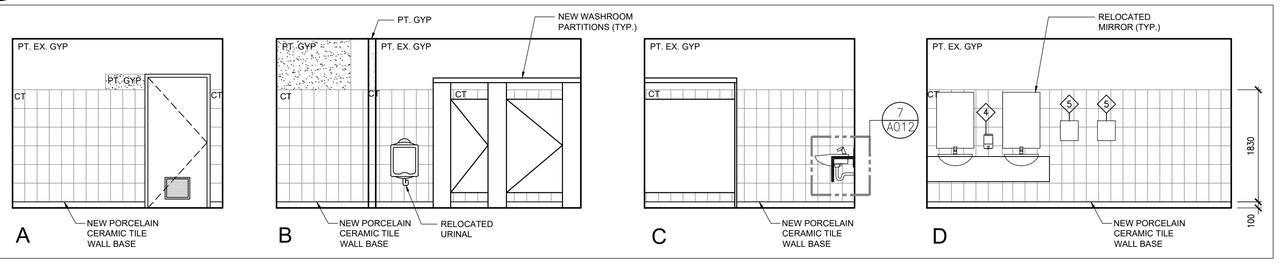


## 4 / A012 EX. MEN W/R 132 - INTERIOR ELEVATIONS

1:50

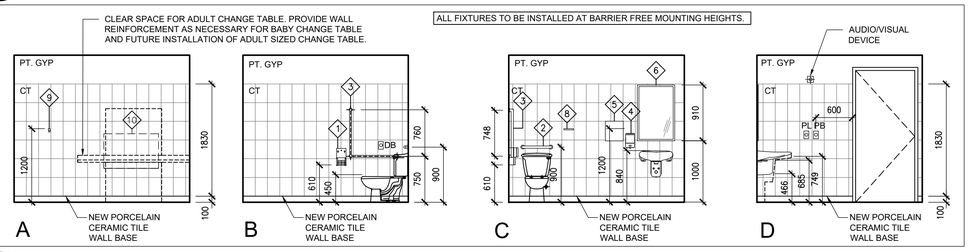


## 3 / A012 UNIV W/R 105 - INTERIOR ELEVATIONS

1:50

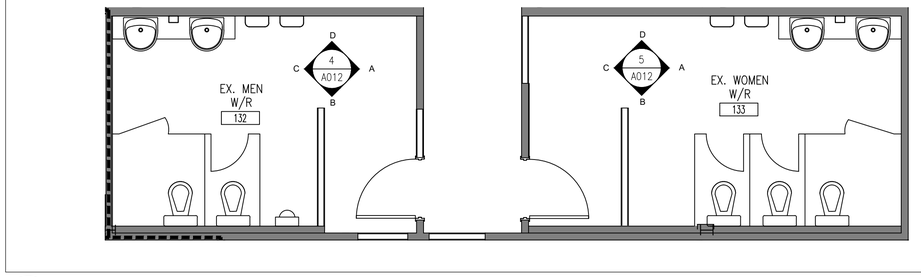


## 2 / A012 EX. MEN (132) & WOMEN (133) W/R PLAN

1:50

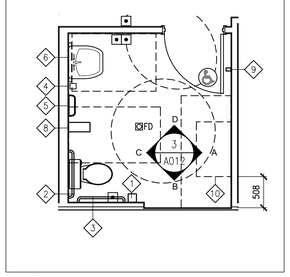


## 1 / A012 UNIV W/R 105 PLAN

1:50

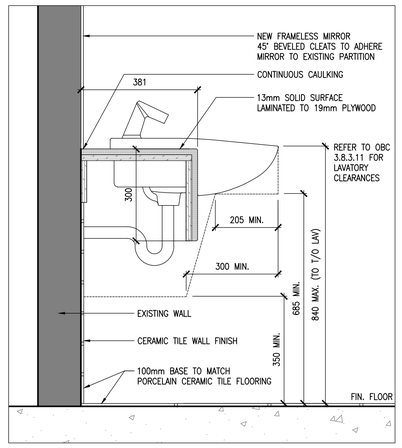


## 7 / A012 COUNTERTOP SECTION

1:10

### BARRIER FREE MOUNTING HEIGHT REQUIREMENTS

1. GRAB BARS SHALL BE MIN. 35mm Ø, 40mm Ø MAX.
2. CLEARANCE FOR GRAB BARS TO BE MIN. 38mm, 50mm MAX.
3. GRAB BARS TO HAVE SLIP RESISTANT SURFACE AS SPECIFIED.
4. INSTALL GRAB BARS TO SUPPORT LOADING REQUIRED BY THE ONTARIO BUILDING CODE.
5. LOCATE COAT HOOK ON SIDEWALL OF TOILET STALL DOOR AT 1200mm MAX. ABOVE FINISHED FLOOR AND PROJECTING NOT MORE THAN 50mm.

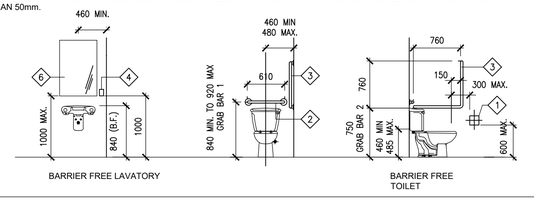


### WASHROOM ACCESSORIES MOUNTING HEIGHTS

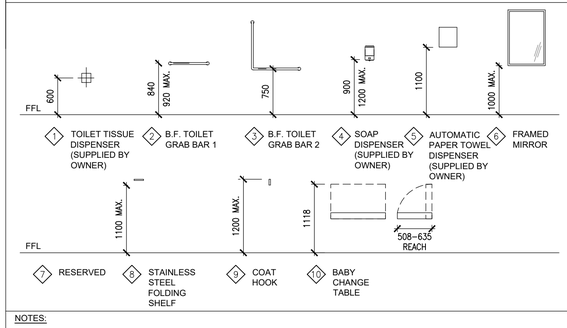


NOTES:

1. TOILET TISSUE DISPENSER - (1) PER TOILET FIXTURE. (SUPPLIED BY OWNER, INSTALLED BY CONTRACTOR)
2. GRAB BAR-1 - (1) PER B.F. TOILET FIXTURE
3. GRAB BAR-2 - (1) PER B.F. TOILET FIXTURE
4. SOAP DISPENSER - (1) PER DRESSING ROOM LAVATORY FIXTURE (SUPPLIED BY OWNER, INSTALLED BY CONTRACTOR)
5. AUTOMATIC PAPER TOWEL DISPENSER - (1) PER DRESSING ROOM LAVATORY FIXTURE (SUPPLIED BY OWNER, INSTALLED BY CONTRACTOR)
6. STAINLESS STEEL MIRROR - (1) PER DRESSING ROOM LAVATORY FIXTURE.
7. RESERVED
8. STAINLESS STEEL FOLDING SHELF - (1) PER B.F. WASHROOM U.N.O.
9. COAT HOOK - (1) PER UNIVERSAL WASHROOM
10. BABY CHANGE TABLE - (1) PER UNIVERSAL WASHROOM

NOTE: ALL DIMENSIONS ARE IN METRES UNLESS OTHERWISE NOTED.

ALL MEASUREMENTS ARE TO BE VERIFIED BY THE CONTRACTOR ON SITE AND ANY DISCREPANCIES ARE TO BE REPORTED BEFORE PROCEEDING WITH THE WORK. THE REGION OF DURHAM ASSUMES NO RESPONSIBILITY FOR THE ACCURACY OF THE LOCATION OF EXISTING SERVICES AS INDICATED ON THIS DRAWING. DO NOT SCALE DRAWINGS.

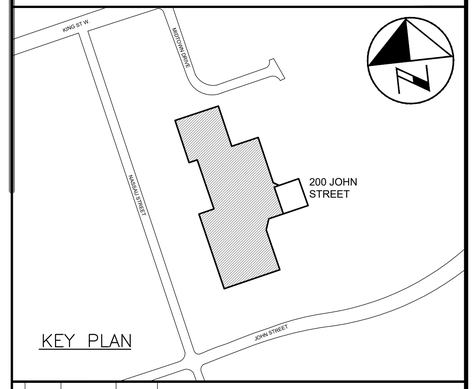


CONSULTANT REVISIONS

| NO. | DATE | NAME | REVISIONS |
|---|---|---|---|

PRIME CONSULTANT

BARRY BRYAN ASSOCIATES
Architects
Engineers
Project Managers
250 Water St.
Suite 201
Whitby, Ontario
L1N 0G5
Tel: (905) 666-5252
Fax: (905) 666-5256
e-mail: bba@bba-archeng.com

ONTARIO ASSOCIATION OF ARCHITECTS WILLIAM WEIMA LICENCE # 4010 FEB 17/21

SUB–CONSULTANT

| | |
|---|---|
| DESIGN BY: WW | SCALE 1:50 |
| DRAWN BY: KM | DATE: 2021–03–24 |
| CHECKED BY: CM | CONSULTANT PROJECT NO. 20060 |
| APPROVED BY: WW | |

CONTRACT REVISIONS

| NO. | DATE | NAME | REVISIONS |
|---|---|---|---|
| 5 | FEB 12/21 | BBA | ISSUED FOR PERMIT & TENDER |
| 4 | JAN 13/21 | BBA | RE–ISSUED FOR 90% CLIENT REVIEW |
| 3 | NOV 5/20 | BBA | ISSUED FOR 90% CLIENT REVIEW |
| 2 | AUG 14/20 | BBA | ISSUED FOR REVISED 60% CLIENT REVIEW |
| 1 | MAY 27/20 | BBA | ISSUED FOR 60% CLIENT REVIEW |

THE REGIONAL MUNICIPALITY OF DURHAM
WORKS DEPARTMENT
DESIGN, CONSTRUCTION & ASSET MANAGEMENT

# RELOCATION OF DENTAL CLINIC TO 200 JOHN ST., OSHAWA ENLARGED WASHROOM PLANS & ELEVATIONS

| PROPERTY NO. | FACILITY CODE | FACILITIES PROJECT NO. |
|---|---|---|
| N/A | LEA–0–07 | LEA–0–07–19–01 |
| CONTRACT NO. | DRAWING NO. | SHEET NO. |
| T–1032–2021 | A–012 | 012 |

\\fileserv\Project Data\2020\20060 Durham Region-New Dental Clinic, 200 John St. W, Oshawa\Drawings\Current\20060 A-012 ELEV INT WR.dwg

ALL MILLWORK (FOR OPERATORIES, DENTURIST WORKSHOP & STERILIZATION ROOM) TO BE DESIGNED IN ACCORDANCE WITH THE Infection Prevention And Control (IPAC) GUIDELINES.

1. ALL LAMINATE TO BE ANTIBACTERIAL LAMINATE.
2. STAINLESS STEEL OR OTHER NON-ABSORBING MATERIAL KICK PLATES.
3. 3mm BANDING ON ALL EDGES OF MILLWORK.

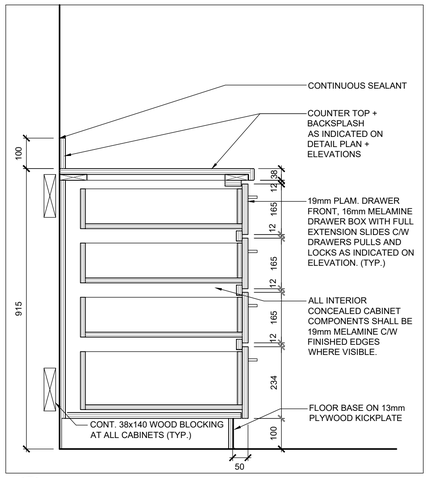


9 A013 SECTION THROUGH DRAWERS
1:10

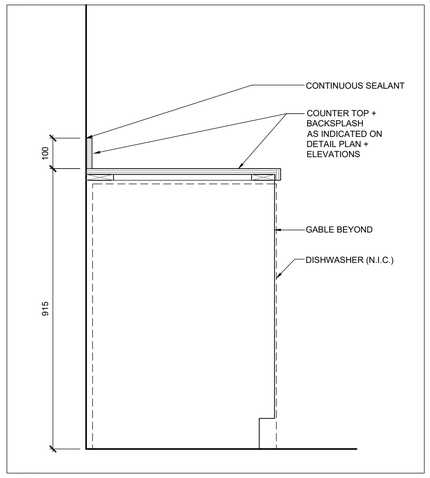


7 A013 SECTION THROUGH COUNTERTOP
1:10

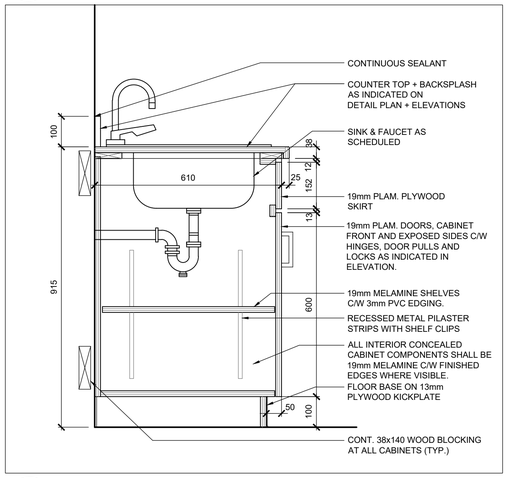


5 A013 SECTION THROUGH SINK
1:10

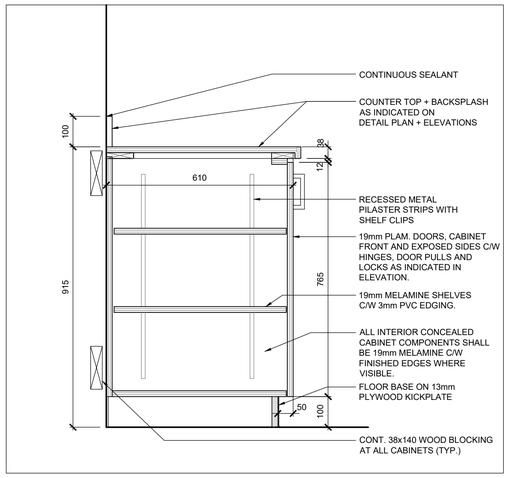


3 A013 SECTION THROUGH LOWER CABINET
1:10

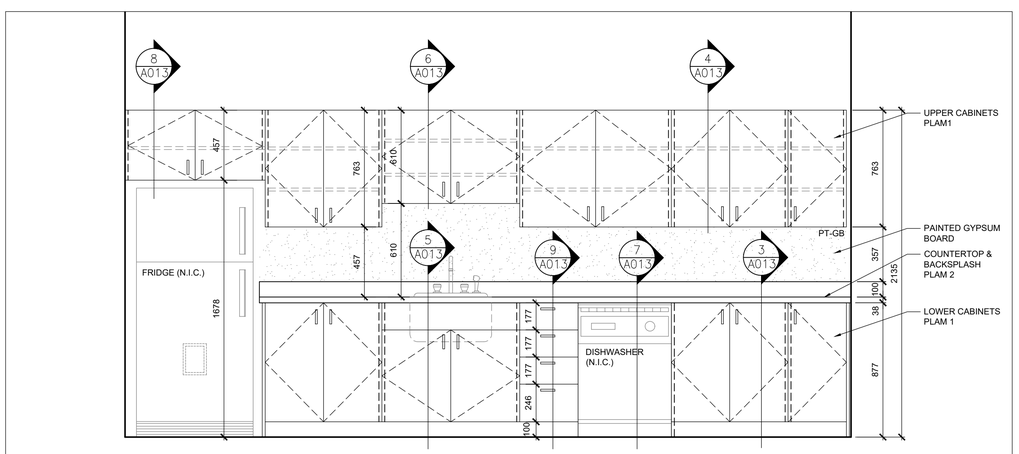


2 A013 KITCHEN MILLWORK ELEVATION
1:20

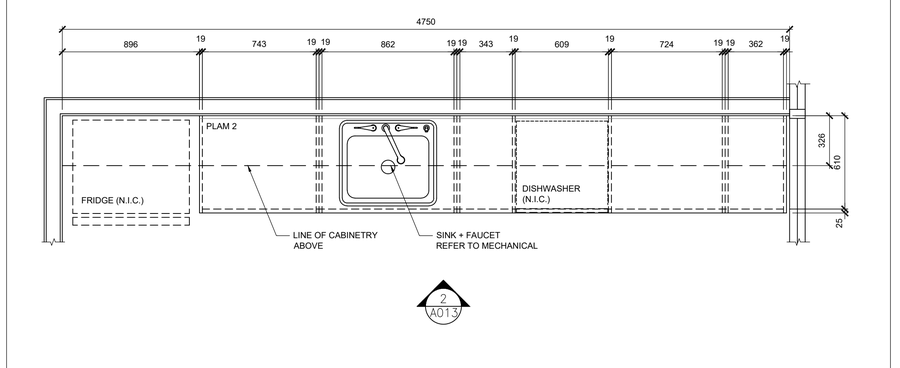


1 A013 KITCHEN MILLWORK DETAIL PLAN
1:20

NOTE: ALL DIMENSIONS ARE IN METRES UNLESS OTHERWISE NOTED.

ALL MEASUREMENTS ARE TO BE VERIFIED BY THE CONTRACTOR ON SITE AND ANY DISCREPANCIES ARE TO BE REPORTED BEFORE PROCEEDING WITH THE WORK. THE REGION OF DURHAM ASSUMES NO RESPONSIBILITY FOR THE ACCURACY OF THE LOCATION OF EXISTING SERVICES AS INDICATED ON THIS DRAWING. DO NOT SCALE DRAWINGS.

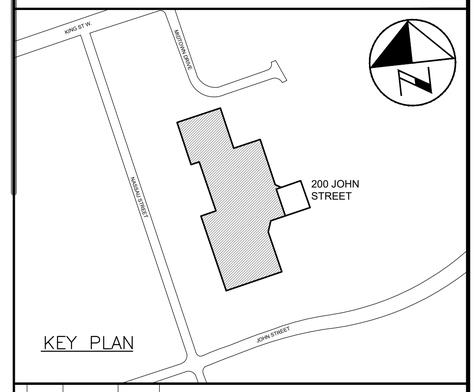


CONSULTANT REVISIONS

| NO. | DATE | NAME | REVISIONS |
|---|---|---|---|

PRIME CONSULTANT

BARRY BRYAN ASSOCIATES
Architects
Engineers
Project Managers
250 Water St.
Suite 201
Whitby, Ontario
L1N 0G5
Tel: (905) 666-5252
Fax: (905) 666-5256
e-mail: bba@bba-archeng.com

ONTARIO ASSOCIATION OF ARCHITECTS WILLIAM WEIMA LICENCE 4910

SUB–CONSULTANT

| | |
|---|---|
| DESIGN BY: WW | SCALE AS NOTED |
| DRAWN BY: KM | DATE: 2021–02–12 |
| CHECKED BY: CM | CONSULTANT PROJECT NO. 20060 |
| APPROVED BY: WW | |

CONTRACT REVISIONS

| NO. | DATE | NAME | REVISIONS |
|---|---|---|---|
| 5 | FEB 12/21 | BBA | ISSUED FOR PERMIT & TENDER |
| 4 | JAN 13/21 | BBA | RE–ISSUED FOR 90% CLIENT REVIEW |
| 3 | NOV 5/20 | BBA | ISSUED FOR 90% CLIENT REVIEW |
| 2 | AUG 14/20 | BBA | ISSUED FOR REVISED 60% CLIENT REVIEW |
| 1 | MAY 27/20 | BBA | ISSUED FOR 60% CLIENT REVIEW |

THE REGIONAL MUNICIPALITY OF DURHAM
WORKS DEPARTMENT
DESIGN, CONSTRUCTION & ASSET MANAGEMENT

# RELOCATION OF DENTAL CLINIC TO 200 JOHN ST., OSHAWA

## MILLWORK DETAILS

| PROPERTY NO. | FACILITY CODE | FACILITIES PROJECT NO. |
|---|---|---|
| N/A | LEA–O–07 | LEA–O–07–19–01 |
| CONTRACT NO. | DRAWING NO. | SHEET NO. |
| T–1032–2021 | A–013 | 013 |

\\flesvrProject Data\2020\20060 Durham Region-New Dental Clinic, 200 John St. W, Oshawa\Drawings\Current\20060 A-013 MILLWORK.dwg

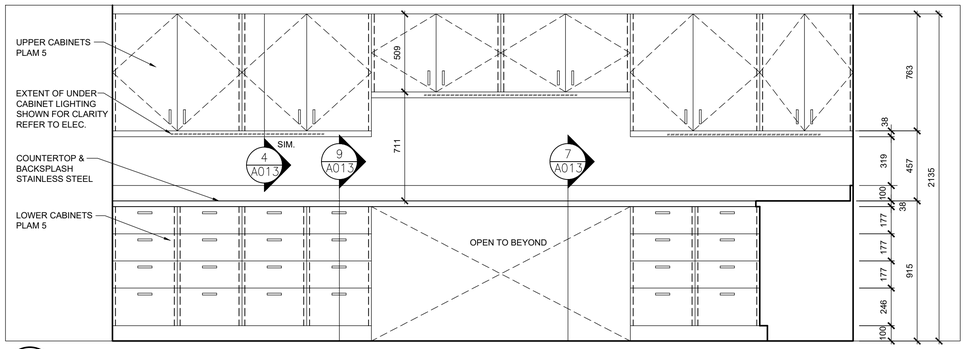


8 A014 DENTURIST WORKSHOP MILLWORK ELEVATION 2

1:20

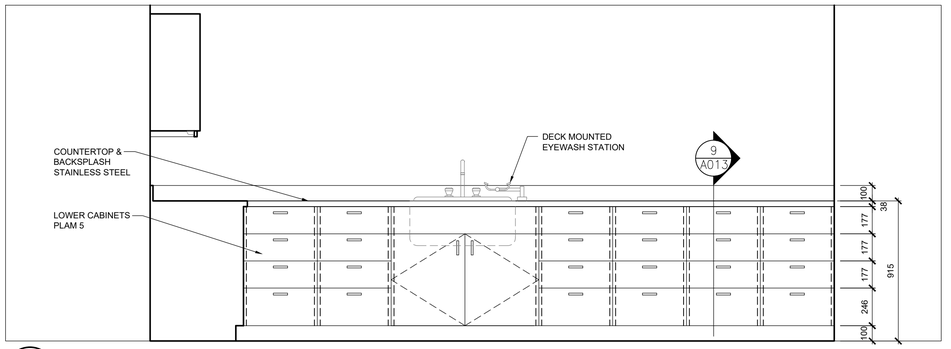


7 A014 DENTURIST WORKSHOP MILLWORK ELEVATION 1

1:20

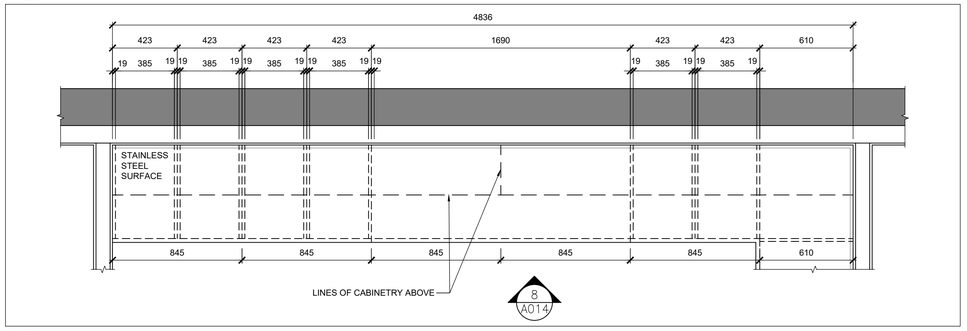


6 A014 DENTURIST WORKSHOP MILLWORK DETAIL PLAN 2

1:20

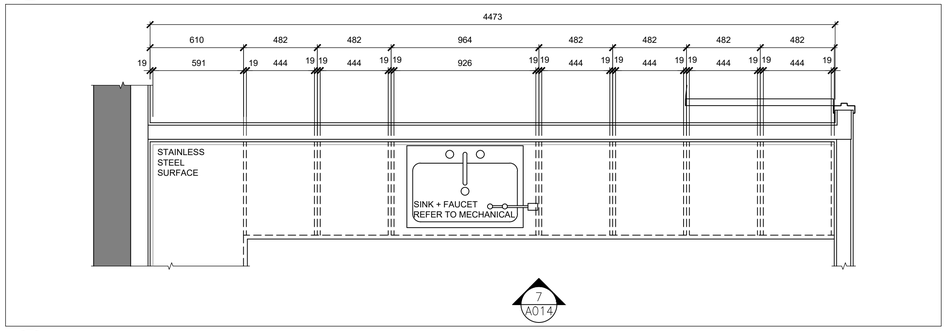


5 A014 DENTURIST WORKSHOP MILLWORK DETAIL PLAN 1

1:20

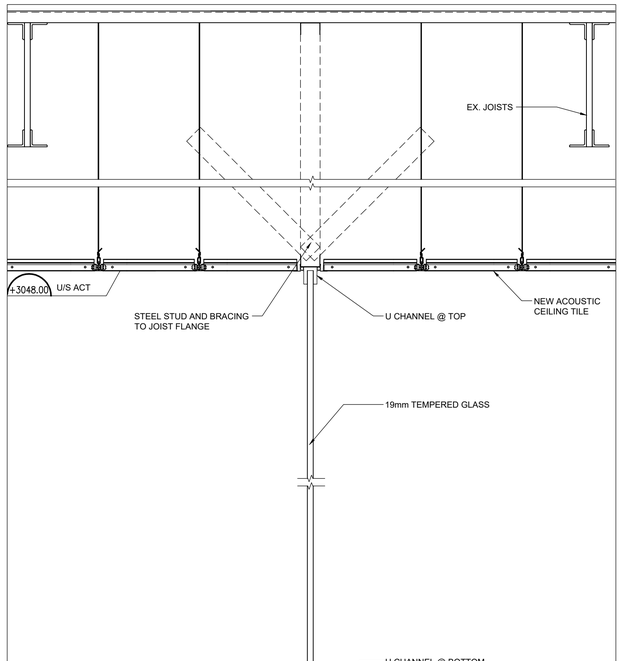


4 A014 GLASS PARTITION SECTION

1:10

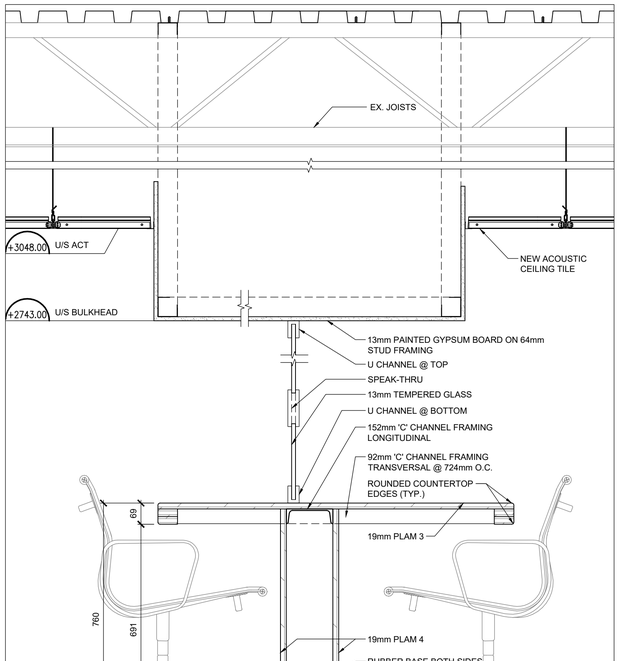


3 A014 RECEPTION DESK SECTION

1:10

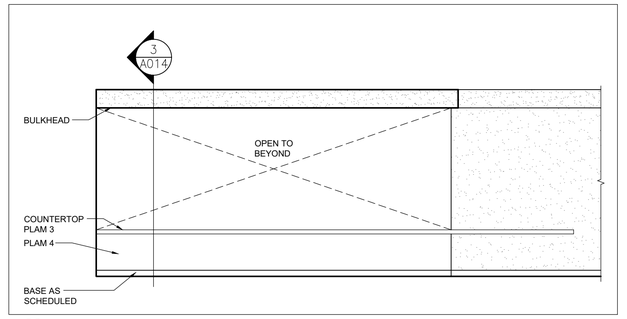


2 A014 RECEPTION MILLWORK ELEVATION

1:50

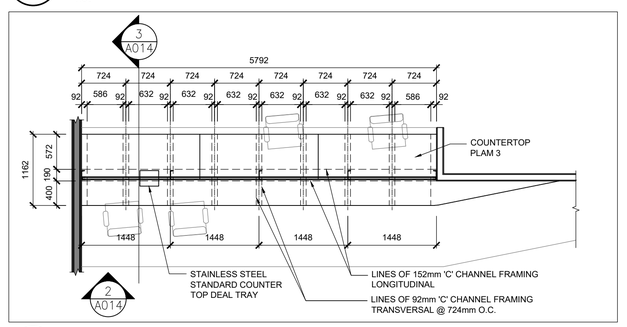


1 A014 RECEPTION MILLWORK DETAIL PLAN

1:50

NOTE: ALL DIMENSIONS ARE IN METRES UNLESS OTHERWISE NOTED.

ALL MEASUREMENTS ARE TO BE VERIFIED BY THE CONTRACTOR ON SITE AND ANY DISCREPANCIES ARE TO BE REPORTED BEFORE PROCEEDING WITH THE WORK. THE REGION OF DURHAM ASSUMES NO RESPONSIBILITY FOR THE ACCURACY OF THE LOCATION OF EXISTING SERVICES AS INDICATED ON THIS DRAWING. DO NOT SCALE DRAWINGS.

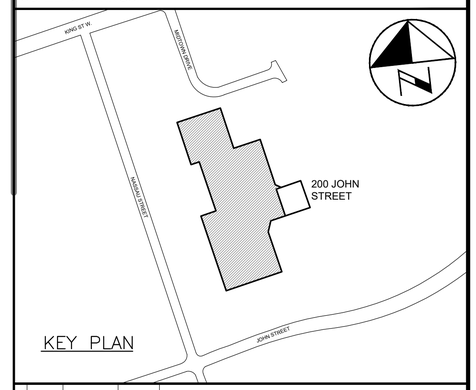


CONSULTANT REVISIONS

| NO. | DATE | NAME | REVISIONS |
|---|---|---|---|
| | | | |

PRIME CONSULTANT

BARRY BRYAN ASSOCIATES
Architects
Engineers
Project Managers
250 Water St.
Suite 201
Whitby, Ontario
L1N 0G5
Tel: (905) 666-5252
Fax: (905) 666-5256
e-mail: bba@bba-archeng.com

ONTARIO ASSOCIATION OF ARCHITECTS WILLIAM WEIMA LICENCE 4910 REVIEWED FOR PERMIT FEB 17/21

SUB-CONSULTANT

| | |
|---|---|
| DESIGN BY: WW | SCALE AS NOTED |
| DRAWN BY: KM | DATE: 2021-02-12 |
| CHECKED BY: CM | CONSULTANT PROJECT NO. 20060 |
| APPROVED BY: WW | |

CONTRACT REVISIONS

| NO. | DATE | NAME | REVISIONS |
|---|---|---|---|
| 5 | FEB 12/21 | BBA | ISSUED FOR PERMIT & TENDER |
| 4 | JAN 13/21 | BBA | RE-ISSUED FOR 90% CLIENT REVIEW |
| 3 | NOV 5/20 | BBA | ISSUED FOR 90% CLIENT REVIEW |
| 2 | AUG 14/20 | BBA | ISSUED FOR REVISED 60% CLIENT REVIEW |
| 1 | MAY 27/20 | BBA | ISSUED FOR 60% CLIENT REVIEW |

THE REGIONAL MUNICIPALITY OF DURHAM

WORKS DEPARTMENT

DESIGN, CONSTRUCTION & ASSET MANAGEMENT

# RELOCATION OF DENTAL CLINIC TO 200 JOHN ST., OSHAWA

## MILLWORK DETAILS

| PROPERTY NO. | FACILITY CODE | FACILITIES PROJECT NO. |
|---|---|---|
| N/A | LEA-O-07 | LEA-O-07-19-01 |
| **CONTRACT NO.** | **DRAWING NO.** | **SHEET NO.** |
| T-1032-2021 | A-014 | 014 |

\\fileserv\Project Data\2020\20060 Durham Region-New Dental Clinic, 200 John St. W, Oshawa\Drawings\Current\20060 A-014 MILLWORK.dwg

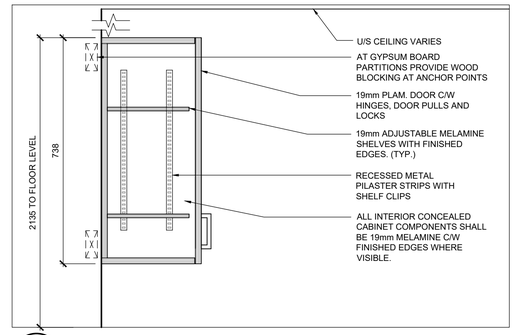


6 A015 SECTION

1:10

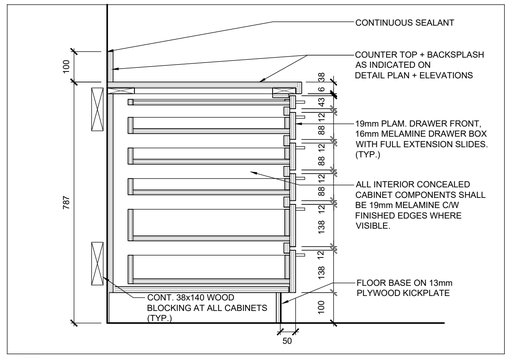


7 A015 SECTION

1:10

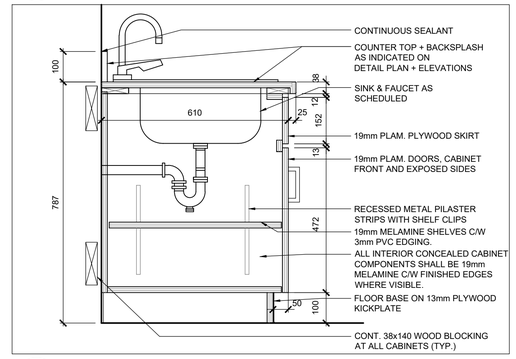


5 A015 SECTION

1:10

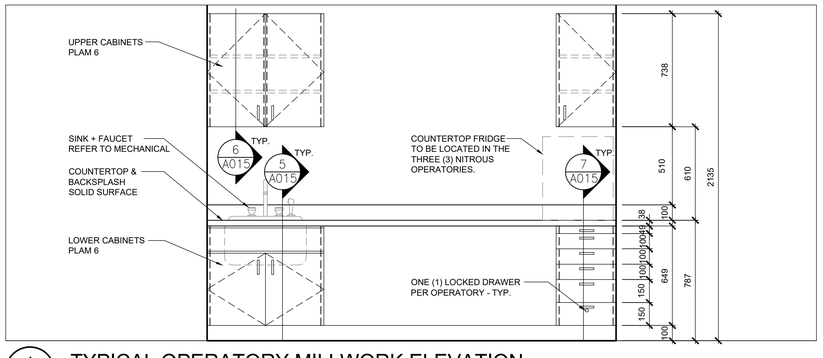


4 A015 TYPICAL OPERATORY MILLWORK ELEVATION

1:20

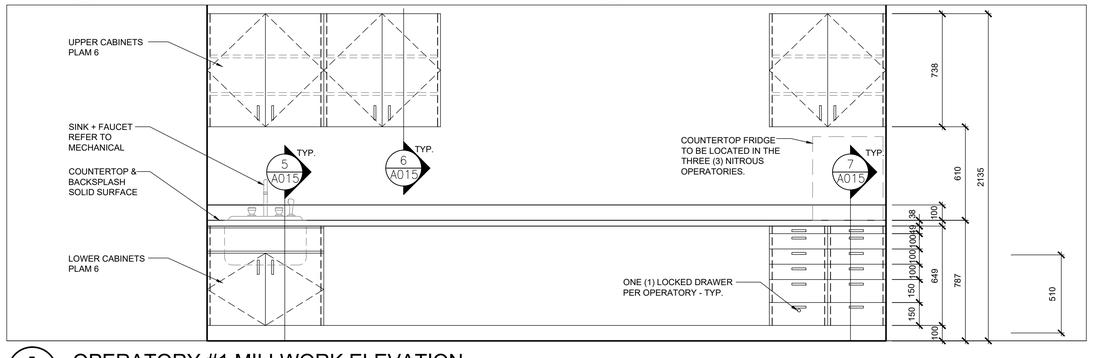


3 A015 OPERATORY #1 MILLWORK ELEVATION

1:20

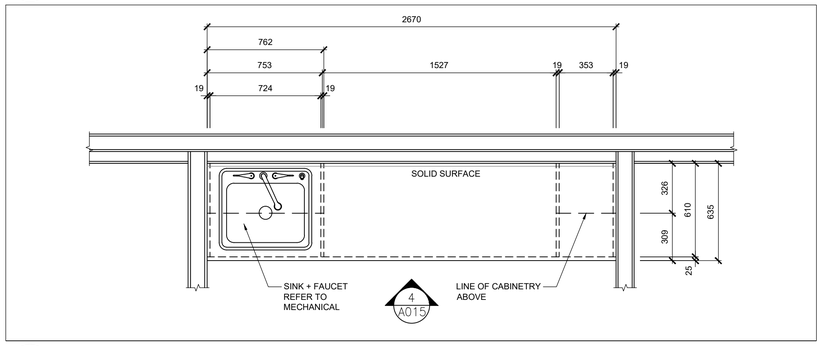


2 A015 TYPICAL OPERATORY MILLWORK DETAIL PLAN

1:20

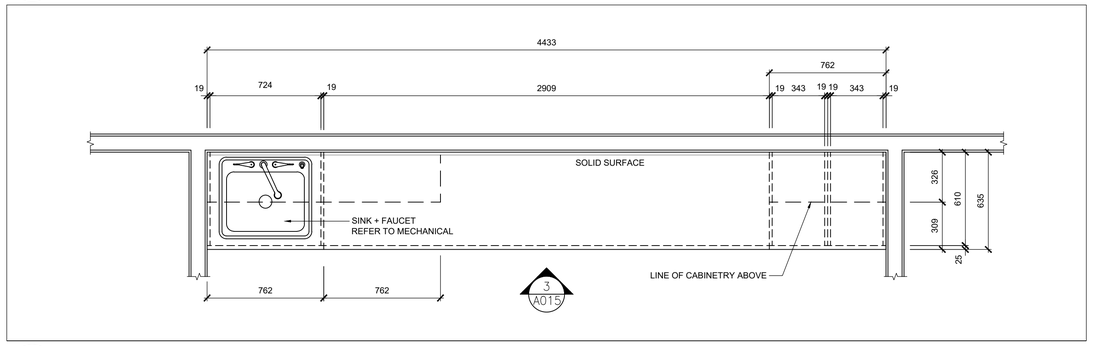


1 A015 OPERATORY #1 MILLWORK DETAIL PLAN

1:20

NOTE: ALL DIMENSIONS ARE IN METRES UNLESS OTHERWISE NOTED.

ALL MEASUREMENTS ARE TO BE VERIFIED BY THE CONTRACTOR ON SITE AND ANY DISCREPANCIES ARE TO BE REPORTED BEFORE PROCEEDING WITH THE WORK. THE REGION OF DURHAM ASSUMES NO RESPONSIBILITY FOR THE ACCURACY OF THE LOCATION OF EXISTING SERVICES AS INDICATED ON THIS DRAWING. DO NOT SCALE DRAWINGS.

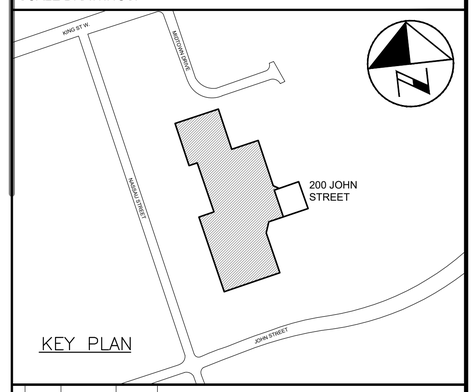


CONSULTANT REVISIONS

| NO. | DATE | NAME | REVISIONS |
|---|---|---|---|
| | | | |

PRIME CONSULTANT

BARRY BRYAN ASSOCIATES
Architects
Engineers
Project Managers
250 Water St.
Suite 201
Whitby, Ontario
L1N 0G5
Tel: (905) 666-5252
Fax: (905) 666-5256
e-mail: bba@bba-archeng.com

BBA

ONTARIO ASSOCIATION OF ARCHITECTS
WILLIAM WEIMA
LICENCE 4910

SUB–CONSULTANT

| | |
|---|---|
| DESIGN BY: WW | SCALE AS NOTED |
| DRAWN BY: DC/KM | DATE: 2021–02–12 |
| CHECKED BY: CM | CONSULTANT PROJECT NO. 20060 |
| APPROVED BY: WW | |

CONTRACT REVISIONS

| NO. | DATE | NAME | REVISIONS |
|---|---|---|---|
| 5 | FEB 12/21 | BBA | ISSUED FOR PERMIT & TENDER |
| 4 | JAN 13/21 | BBA | RE–ISSUED FOR 90% CLIENT REVIEW |
| 3 | NOV 5/20 | BBA | ISSUED FOR 90% CLIENT REVIEW |
| 2 | AUG 14/20 | BBA | ISSUED FOR REVISED 60% CLIENT REVIEW |
| 1 | MAY 27/20 | BBA | ISSUED FOR 60% CLIENT REVIEW |

DURHAM REGION

THE REGIONAL MUNICIPALITY OF DURHAM

WORKS DEPARTMENT

DESIGN, CONSTRUCTION & ASSET MANAGEMENT

# RELOCATION OF DENTAL CLINIC TO 200 JOHN ST., OSHAWA

## MILLWORK DETAILS

| PROPERTY NO. | FACILITY CODE | FACILITIES PROJECT NO. |
|---|---|---|
| N/A | LEA–0–07 | LEA–0–07–19–01 |
| CONTRACT NO. | DRAWING NO. | SHEET NO. |
| T–1032–2021 | A–015 | 015 |

\\filesrv\Project Data\2020\20060 Durham Region-New Dental Clinic, 200 John St. W, Oshawa\Drawings\Current\20060 A-015 MILLWORK.dwg

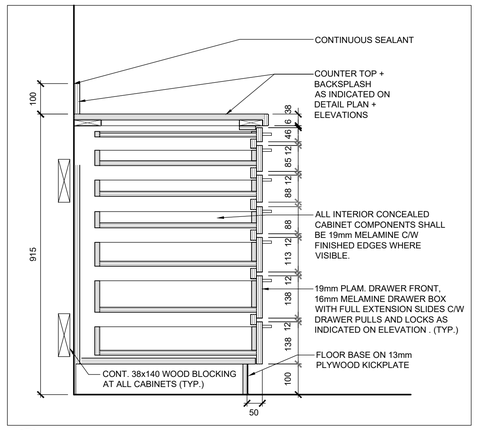


7 / A016 SECTION
1:10

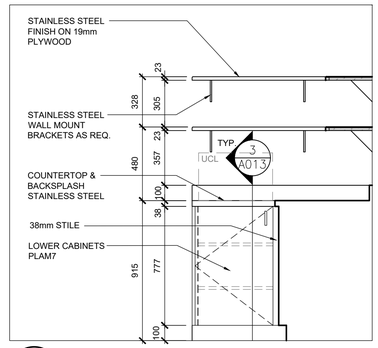


6 / A016 STERILIZATION ROOM ELEVATION 3
1:20

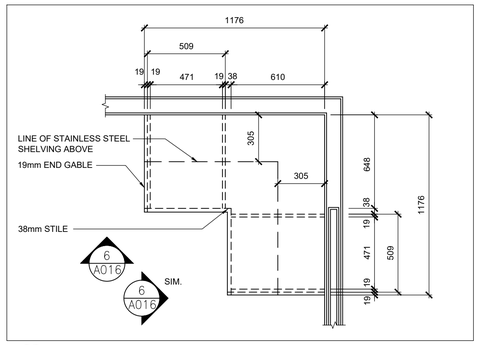


5 / A016 STERILIZATION ROOM MILLWORK DETAIL PLAN 3
1:20

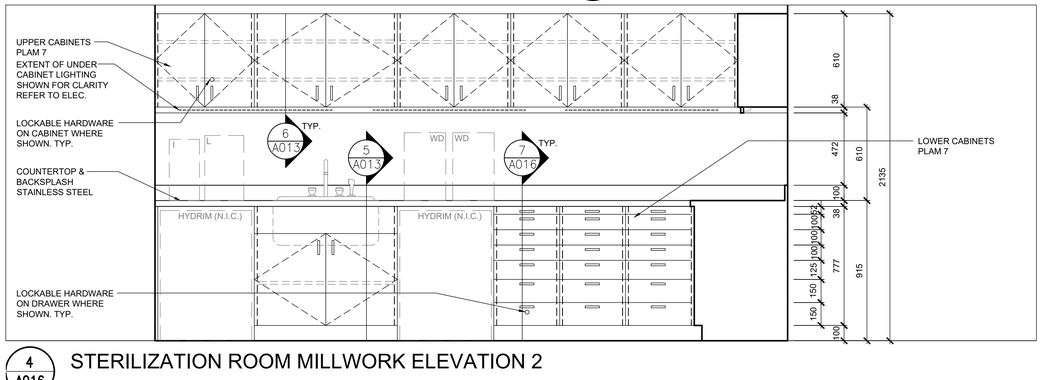


4 / A016 STERILIZATION ROOM MILLWORK ELEVATION 2
1:20

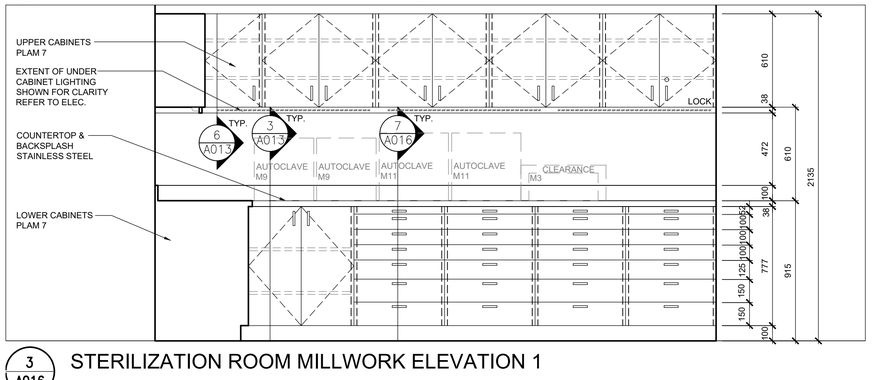


3 / A016 STERILIZATION ROOM MILLWORK ELEVATION 1
1:20

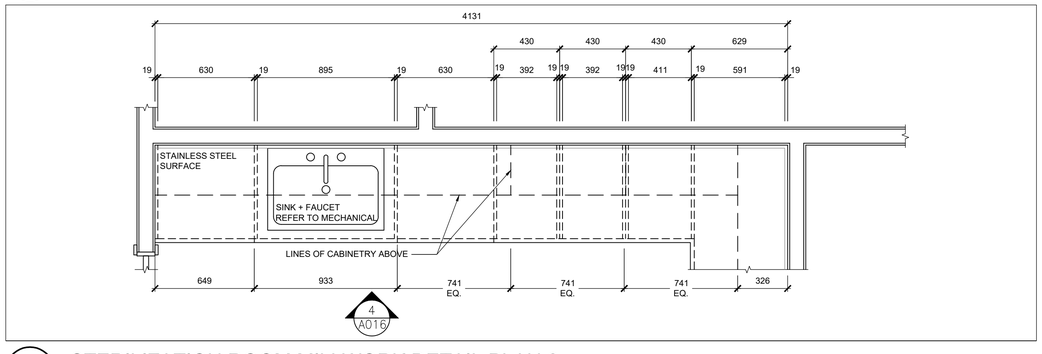


2 / A016 STERILIZATION ROOM MILLWORK DETAIL PLAN 2
1:20

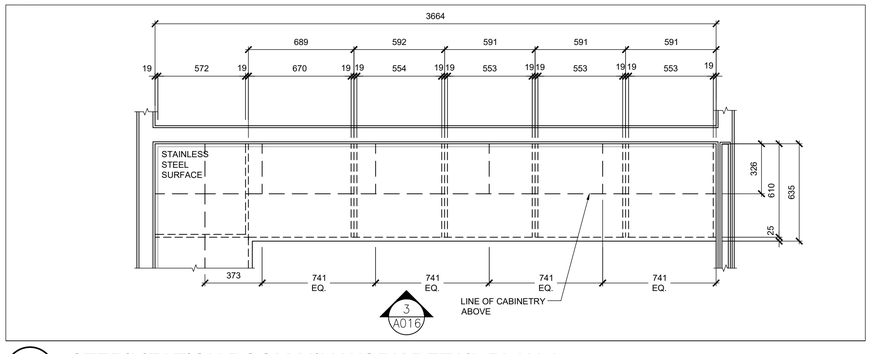


1 / A016 STERILIZATION ROOM MILLWORK DETAIL PLAN 1
1:20

NOTE: ALL DIMENSIONS ARE IN METRES UNLESS OTHERWISE NOTED.

ALL MEASUREMENTS ARE TO BE VERIFIED BY THE CONTRACTOR ON SITE AND ANY DISCREPANCIES ARE TO BE REPORTED BEFORE PROCEEDING WITH THE WORK. THE REGION OF DURHAM ASSUMES NO RESPONSIBILITY FOR THE ACCURACY OF THE LOCATION OF EXISTING SERVICES AS INDICATED ON THIS DRAWING. DO NOT SCALE DRAWINGS.

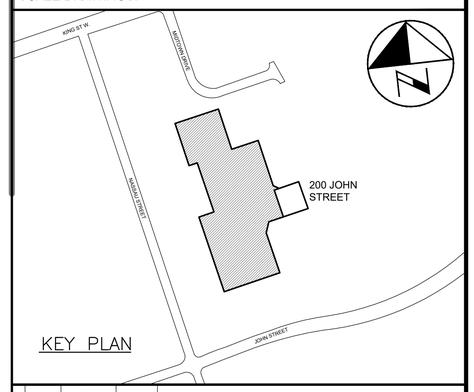


KEY PLAN

CONSULTANT REVISIONS

| NO. | DATE | NAME | REVISIONS |
|---|---|---|---|

PRIME CONSULTANT

BARRY BRYAN ASSOCIATES
Architects
Engineers
Project Managers
250 Water St.
Suite 201
Whitby, Ontario
L1N 0G5
Tel: (905) 666-5252
Fax: (905) 666-5256
e-mail: bba@bba-archeng.com

ONTARIO ASSOCIATION OF ARCHITECTS
LICENCE
WILLIAM WEIMA
4010

SUB–CONSULTANT

| | |
|---|---|
| DESIGN BY: WW | SCALE AS NOTED |
| DRAWN BY: DC/KM | DATE: 2021–02–12 |
| CHECKED BY: CM | CONSULTANT PROJECT NO. 20060 |
| APPROVED BY: WW | |

CONTRACT REVISIONS

| NO. | DATE | NAME | REVISIONS |
|---|---|---|---|
| 5 | FEB 12/21 | BBA | ISSUED FOR PERMIT & TENDER |
| 4 | JAN 13/21 | BBA | RE–ISSUED FOR 90% CLIENT REVIEW |
| 3 | NOV 5/20 | BBA | ISSUED FOR 90% CLIENT REVIEW |
| 2 | AUG 14/20 | BBA | ISSUED FOR REVISED 60% CLIENT REVIEW |
| 1 | MAY 27/20 | BBA | ISSUED FOR 60% CLIENT REVIEW |

DURHAM REGION

THE REGIONAL MUNICIPALITY OF DURHAM
WORKS DEPARTMENT
DESIGN, CONSTRUCTION & ASSET MANAGEMENT

# RELOCATION OF DENTAL CLINIC TO 200 JOHN ST., OSHAWA

## MILLWORK DETAILS

| PROPERTY NO. | FACILITY CODE | FACILITIES PROJECT NO. |
|---|---|---|
| N/A | LEA–0–07 | LEA–0–07–19–01 |
| CONTRACT NO. | DRAWING NO. | SHEET NO. |
| T–1032–2021 | A–016 | 016 |

\\files\y\Project Data\2020\20060 Durham Region-New Dental Clinic, 200 John St. W, Oshawa\Drawings\Current\20060 A-016 MILLWORK.dwg

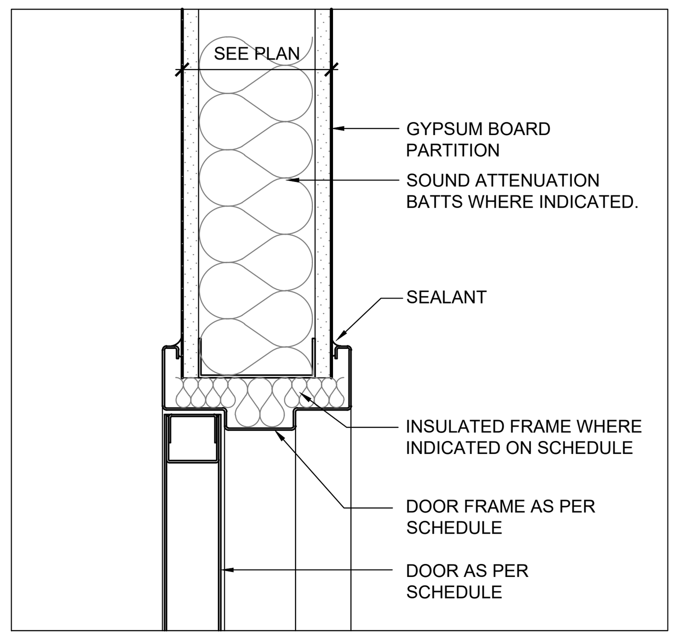


DETAIL H1

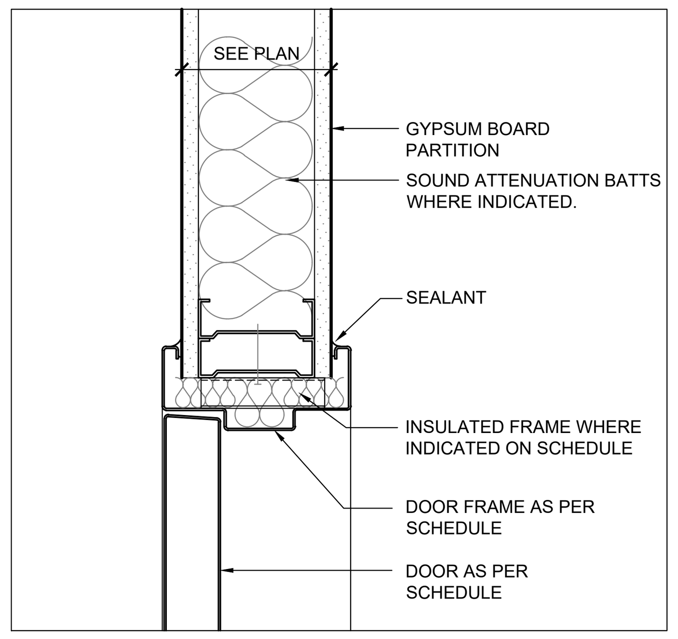


DETAIL J1

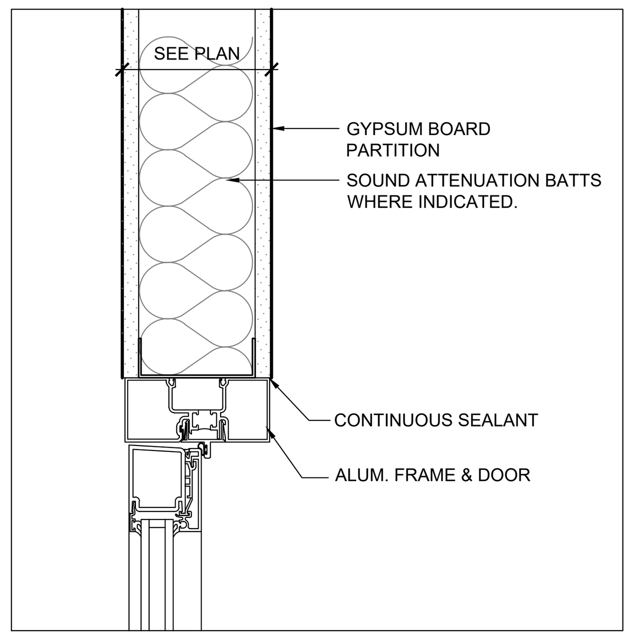


DETAIL H2

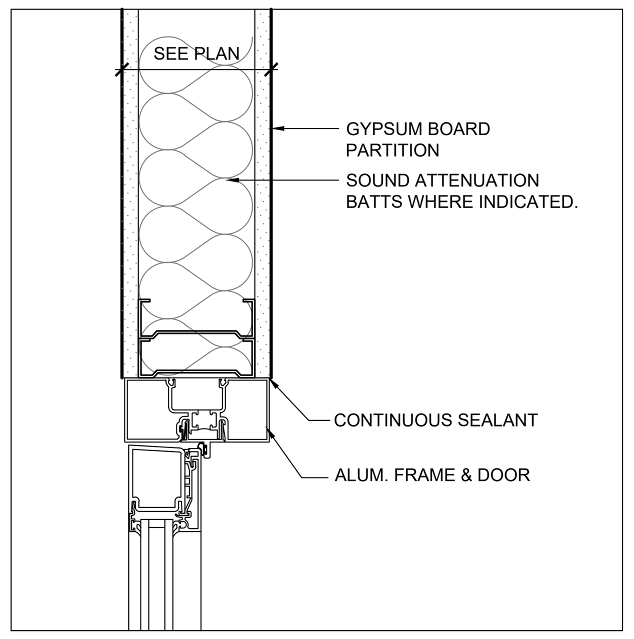


DETAIL J2

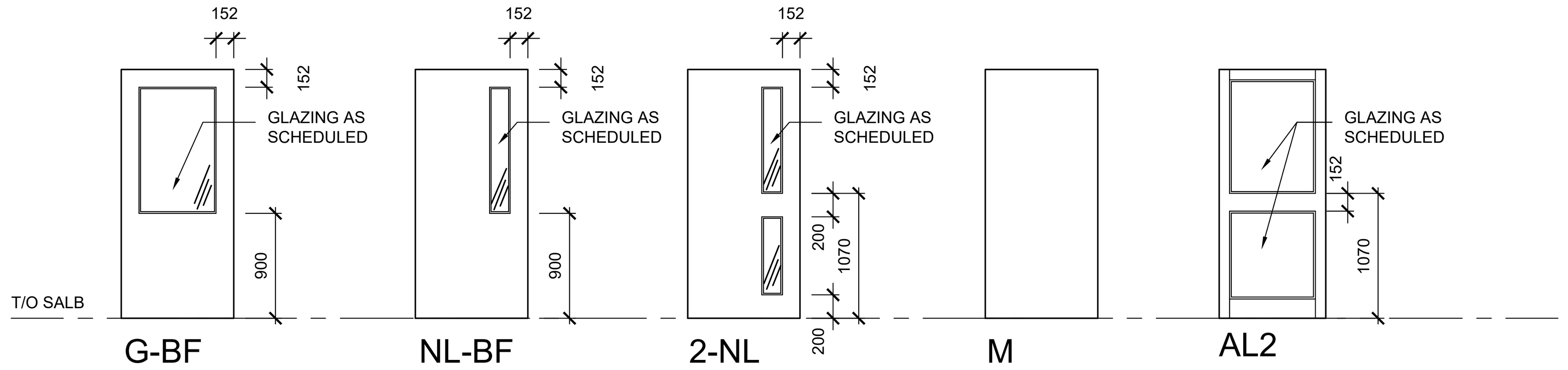


DOOR TYPES

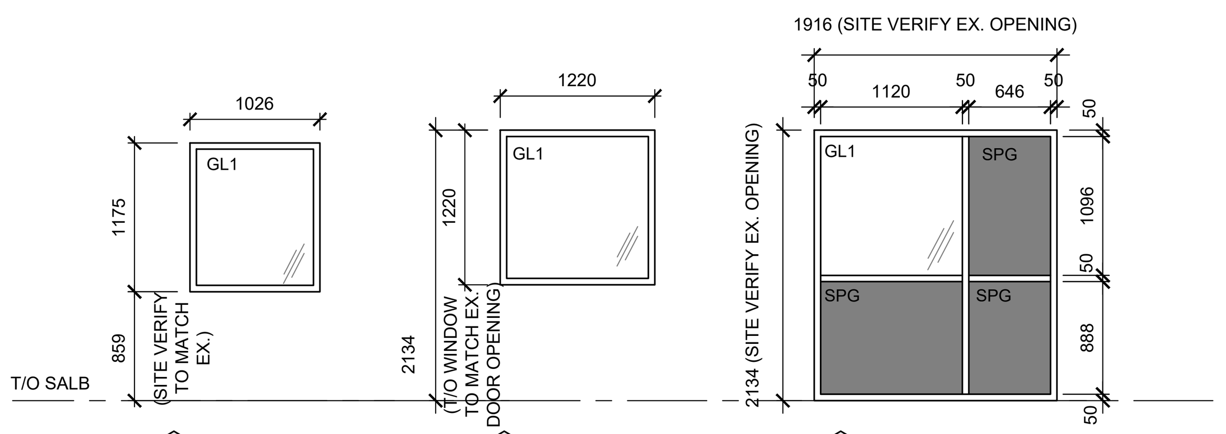


G01 PRE-FINISHED ALUMINUM GLAZING

G02 PRE-FINISHED ALUMINUM GLAZING

G03 PRE-FINISHED ALUMINUM FRAME WITH SPANDREL

GLAZING

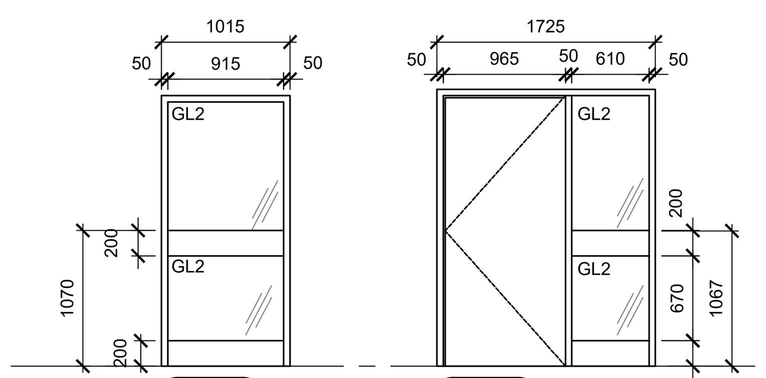


SCREEN TYPES

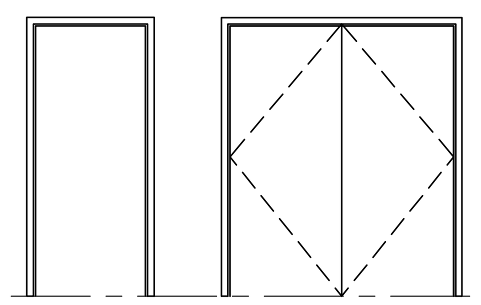


FRAME TYPES

## GENERAL NOTES

A. PREPARE DOORS AND FRAMES FOR ELECTRONIC HARDWARE WHERE INDICATED. CONDUITS SHALL BE CONCEALED IN FRAMES.

B. ALL DOORS IN FIRE SEPARATION LOCATIONS SHALL HAVE LATCHING DEVICE.

## GLAZING LEGEND

| | |
|---|---|
| GL1 | 25 mm SEALED TEMPERED, DOUBLE GLAZED UNITS (COLOURED GLASS TO MATCH EXISTING). |
| GL2 | 6mm TEMPERED GLASS |
| FRG | FIRE RESISTANT GLAZING |
| SPG | 8.0mm GLASS WITH INSULATED METAL BACK-PAN |

## FINISH ABBREVIATION LEGEND

| | |
|---|---|
| ACP | ACOUSTIC CEILING PANEL |
| ALUM | ALUMINUM |
| ANOD | ANODIZED |
| CPT | CARPET |
| CB | CONCRETE BLOCK |
| CONC | CONCRETE |
| CONT | CONTINUE |
| CT | CERAMIC TILE |
| EXIST | EXISTING |
| EXP | EXPOSED |
| G | GLASS |
| GB | GYPSUM BOARD |
| HM | HOLLOW METAL |
| LVT | LUXURY LINYL TILE |
| NTS | NOT TO SCALE |
| P | PAINT |
| PCT | PORCELAIN TILE |
| PREFIN | PREFINISHED |
| PS | PRESSED STEEL |
| RSF | RESILIENT SHEET FLOORNG |
| R | RUBBER |
| SC | SEALED CONCRETE |
| SEAL | SEALER |
| TG | TEMPERED GLASS |
| URETH | URETHANE |

## DOOR AND FRAME SCHEDULE

| DOOR NO. | SIZE AND THICKNESS | DOOR TYPE | DOOR MATERIAL | DOOR FINISH | GLASS | FRAME TYPE | FRAME DETAIL HEAD | FRAME DETAIL JAMB | FRAME MATERIAL | FRAME FINISH | FIRE RATING | BALL BEARING HINGE | CONTINUOUS HINGE | CLOSER | DOOR STOP | THRESHOLD | KICK PLATE | DOOR OPERATOR | PANIC DEVICE | Mul-T-Lock KEYWAY | Schlage Key Lock | LOCKSET | LATCHSET | PRIVACY | ELECTRIC STRIKE | PUSH PLATE | SLIDING DOOR TRACK & PULLS | PUSH TO LOCK | DOOR PULL | CARD READER | REMARKS |
|---|---|---|---|---|---|---|---|---|---|---|---|---|---|---|---|---|---|---|---|---|---|---|---|---|---|---|---|---|---|---|---|
| V01A | EXISTING | EX. | ALUM | ANOD | EX. | EX. | EX. | EX. | ALUM | ANOD | | | | | | | | ● | ● | ● | | | | | ● | | | | | ● | EXISTING HARDWARE AND LOCKSETS TO REMAIN. NEW ADO |
| V01B | EXISTING | EX. | ALUM | ANOD | EX. | EX. | EX. | EX. | ALUM | ANOD | | | | | | | | ● | ● | | | | | | | | | | | | EXISTING HARDWARE AND LOCKSETS TO REMAIN. NEW ADO |
| V02A | EXISTING | EX. | ALUM | ANOD | EX. | EX. | EX. | EX. | ALUM | ANOD | | | | | | | | ● | ● | ● | | | | | ● | | | | | ● | EXISTING HARDWARE AND LOCKSETS TO REMAIN. NEW ADO |
| V02B | 965x2150x45 | AL2 | ALUM | ANOD | GL1 | - | H2 | J2 | ALUM | ANOD | | | ● | | | | | ● | ● | | | | | | | | | | | | NEW ADO |
| C01 | 965x2150x45 | 2NL | WD | URETH | GL2 | F1 | H1 | J1 | PS | PAINT | | ● | | | ● | | ● | ● | ● | ● | | | | | ● | | | | | ● | NEW ADO |
| C02 | 965/305x2150x45 | NL-BF/M | WD | URETH | GL2 | F2 | H1 | J1 | PS | PAINT | | ● | | | ● | | ● | ● | ● | ● | | | ● | | ● | | | | | ● | NEW ADO |
| C03 | 965x2150x45 | NL-BF | WD | URETH | GL2 | F1 | H1 | J1 | PS | PAINT | | ● | | ● | ● | | ● | | ● | ● | | | ● | | ● | | | | | ● | |
| C06 | 965x2150x45 | 2NL | WD | URETH | GL2 | F1 | H1 | J1 | PS | PAINT | | ● | | ● | ● | | ● | ● | | ● | | | | | ● | | | | | ● | NEW ADO |
| 102 | 965x2150x45 | NL-BF | WD | URETH | GL2 | F1 | H1 | J1 | PS | PAINT | | ● | | ● | ● | | ● | | | ● | | | | | ● | | | | | ● | |
| 105 | 965x2150x45 | M | WD | URETH | - | F1 | H1 | J1 | PS | PAINT | | ● | | | | | ● | ● | | | | | | | ● | | | ● | | | UNIVERSAL WASHROOM HARDWARE KIT, DOOR LOUVRE, NEW ADO |
| 106 | 965x2150x45 | G-BF | WD | URETH | GL2 | F1 | H1 | J1 | PS | PAINT | | ● | | | ● | | ● | | | | | | ● | | | | | | | | |
| 107 | 965x2150x45 | G-BF | WD | URETH | GL2 | F1 | H1 | J1 | PS | PAINT | | ● | | | ● | | ● | | | | | | ● | | | | | | | | |
| 108 | 965x2150x45 | G-BF | WD | URETH | GL2 | F1 | H1 | J1 | PS | PAINT | | ● | | | ● | | ● | | | | ● | | | | | | | | | | SCHLAGE KEY |
| 109 | 965x2150x45 | G-BF | WD | URETH | GL2 | F1 | H1 | J1 | PS | PAINT | | ● | | | ● | | ● | | | | ● | | | | | | | | | | SCHLAGE KEY |
| 110 | 965x2150x45 | G-BF | WD | URETH | GL2 | F1 | H1 | J1 | PS | PAINT | | ● | | | ● | | ● | | | | ● | | | | | | | | | | SCHLAGE KEY |
| 111B | 965x2150x45 | M | WD | URETH | - | - | - | - | WD | URETH | | | | | | | | | | | | | | | | | ● | | | | SLIDING DOOR HARDWARE KIT |
| 112 | 915x2150x45 | M | WD | URETH | - | F1 | H1 | J1 | PS | PAINT | | ● | | | ● | | ● | | | ● | | | | | | | | | | ● | |
| 113 | 965x2150x45 | NL-BF | WD | URETH | GL2 | F1 | H1 | J1 | PS | PAINT | | ● | | | ● | | ● | | | | | | | ● | | | | | | | |
| 114 | 965x2150x45 | NL-BF | WD | URETH | GL2 | F1 | H1 | J1 | PS | PAINT | | ● | | | ● | | ● | | | | | | | ● | | | | | | | |
| 115 | 965x2150x45 | M | WD | URETH | - | F1 | H1 | J1 | PS | PAINT | | ● | | ● | ● | | ● | | | ● | | | | | ● | | | | | ● | |
| 117A | 1070x2150x45 | G-BF | WD | URETH | GL2 | - | - | - | - | - | | | | | | | | | | | | | | | | | ● | | | | SLIDING POCKET DOOR HARDWARE KIT W/ MAGNET HOLD CLOSE |
| 117B | 1070x2150x45 | G-BF | WD | URETH | GL2 | - | - | - | - | - | | | | | | | | | | | | | | | | | ● | | | | SLIDING POCKET DOOR HARDWARE KIT W/ MAGNET HOLD CLOSE |
| 118 | 1220x2150x45 | NL-BF | WD | PAINT | GL2 | F1 | H1 | J1 | PS | PAINT | | ● | | | ● | | | | | | | | ● | | | | | | | | |
| 119 | 965x2150x45 | NL-BF | WD | URETH | GL2 | F1 | H1 | J1 | PS | PAINT | | ● | | | ● | | | | | | | | ● | | | | | | | | |
| 120 | 965x2150x45 | NL-BF | WD | URETH | GL2 | F1 | H1 | J1 | PS | PAINT | | ● | | | ● | | | | | | | | ● | | | | | | | | |
| 121 | 965x2150x45 | NL-BF | WD | URETH | GL2 | F1 | H1 | J1 | PS | PAINT | | ● | | | ● | | | | | | | | ● | | | | | | | | |
| 122 | 965x2150x45 | NL-BF | WD | URETH | GL2 | F1 | H1 | J1 | PS | PAINT | | ● | | | ● | | | | | | | | ● | | | | | | | | |
| 123 | 965x2150x45 | M | HM | PAINT | - | F1 | H1 | J1 | PS | PAINT | 45 MIN. | ● | | ● | | | ● | | | ● | | | ● | | ● | | | | | ● | |
| 123B | 965x2150x45 | M | HM | PAINT | - | F1 | H1 | J1 | PS | PAINT | 45 MIN. | ● | | ● | | | | | | | | | ● | | | | | | | | LATCHING DEVICE |
| 124 | 965x2150x45 | NL-BF | WD | URETH | GL2 | F1 | H1 | J1 | PS | PAINT | | ● | | | ● | | | | | | | | ● | | | | | | | | |
| 125 | 965x2150x45 | NL-BF | WD | URETH | GL2 | F1 | H1 | J1 | PS | PAINT | | ● | | | ● | | | | | | | | ● | | | | | | | | |
| 126 | 965x2150x45 | G-BF | WD | URETH | GL2 | F1 | H1 | J1 | PS | PAINT | | ● | | | ● | | | | | | | | ● | | | | | | | | |
| 127 | 965x2150x45 | G-BF | WD | URETH | GL2 | F1 | H1 | J1 | PS | PAINT | | ● | | | ● | | | | | | | | ● | | | | | | | | |
| 128 | 965x2150x45 | G-BF | WD | URETH | GL2 | F1 | H1 | J1 | PS | PAINT | | ● | | ● | ● | | ● | | | | | | | | | ● | | | ● | | |
| 129 | 965x2150x45 | NL-BF | HM | PAINT | FRG | F1 | H1 | J1 | PS | PAINT | 45 MIN. | ● | | ● | | | ● | | | | | | ● | | | | | | | | |
| 130 | 965x2150x45 | M | HM | PAINT | - | F1 | H1 | J1 | PS | PAINT | 45 MIN. | ● | | ● | ● | | ● | | | ● | | | | | ● | | | | | ● | |
| 131 | 965x2150x45 | M | HM | PAINT | - | F1 | H1 | J1 | PS | PAINT | 45 MIN. | ● | | | ● | | ● | | | | | | | | | | | | | | |
| 132 | 965x2150x45 | M | WD | URETH | - | F1 | H1 | J1 | PS | PAINT | | ● | | ● | ● | | ● | | | | | | | | | ● | | | ● | | 300mm x 356mm DOOR LOUVRE |
| 133 | 965x2150x45 | M | WD | URETH | - | F1 | H1 | J1 | PS | PAINT | | ● | | ● | ● | | ● | | | | | | | | | ● | | | ● | | 300mm x 356mm DOOR LOUVRE |

## ROOM SCHEDULE

GROUND FLOOR

| ROOM NO. | ROOM NAME | | FLOOR | BASE | WALLS NORTH | WALLS EAST | WALLS SOUTH | WALLS WEST | CEILING | CEILING HEIGHT | REV. | REMARKS |
|---|---|---|---|---|---|---|---|---|---|---|---|---|
| V01 | VESTIBULE | MAT. | CONC. | | GB | GB | GB | GB | GWB | +/-3060 | - | NEW CEILING TO TERMINATE AT TOP OF EXISTING TRANSOM |
| | | FIN. | PCT | PCT | P | P | P | P | P | - | - | |
| | | | | | - | - | - | - | - | - | - | |
| V02 | VESTIBULE | MAT. | CONC. | | - | GB | GB | GB | GWB | +/-3060 | - | NEW CEILING TO TERMINATE AT TOP OF EXISTING TRANSOM |
| | | FIN. | PCT | PCT | - | P | P | P | P | - | - | |
| | | | | | | | | | - | - | - | |
| C01 | CORRIDOR | MAT. | CONC. | | GB | GB | GB | - | ACT | +3048 | - | |
| | | FIN. | LVT | RB | P | P | P | - | - | - | - | |
| | | | | | | | | | - | - | - | |
| C02 | CORRIDOR | MAT. | CONC. | | GB | GB | GB | GB | ACT | +3048 | - | |
| | | FIN. | LINO | LINO | P | P | P | P | - | - | - | |
| | | | | | | | | | - | - | - | |
| C03 | CORRIDOR | MAT. | CONC. | | GB | GB | GB | GB | ACT | +3048 | - | |
| | | FIN. | LINO | LINO | P | P | P | P | - | - | - | |
| | | | | | | | | | - | - | - | |
| C04 | CORRIDOR | MAT. | CONC. | | GB | - | GB | GB | ACT | +3048 | - | |
| | | FIN. | LINO | RB | P | - | P | P | - | - | - | |
| | | | | | | | | | - | - | - | |
| C05 | CORRIDOR | MAT. | CONC. | | GB | - | GB | GB | ACT | +3048 | - | |
| | | FIN. | LINO | RB | P | - | P | P | - | - | - | |
| | | | | | | | | | - | - | - | |
| C06 | CORRIDOR | MAT. | CONC. | | GB | GB | GB | GB | ACT | +3048 | - | |
| | | FIN. | LINO | LINO | P | P | P | P | - | - | - | |
| | | | | | | | | | - | - | - | |
| C07 | CORRIDOR | MAT. | CONC. | | GB | GB | GB | GB | ACT | +3048 | - | |
| | | FIN. | LINO | LINO | P | P | P | P | - | - | - | |
| | | | | | | | | | - | - | - | |
| C08 | CORRIDOR | MAT. | CONC. | | - | GB | GB | GB | ACT | +3048 | - | |
| | | FIN. | LINO | LINO | - | P | P | P | - | - | - | |
| | | | | | | | | | - | - | - | |
| 101 | WAITING AREA | MAT. | CONC. | | GB | GB | EXIST. | EXIST/GB | ACT/GB | +3048/2743 | - | CEILING HEIGHT VARIES. SEE BULKHEAD DETAIL |
| | | FIN. | LVT | RB | P | P | P | P | P | - | - | |
| | | | | | | | | | - | - | - | |
| 102 | RECEPTION | MAT. | CONC. | | GB | GB | - | GB | ACT/GB | +3048/2743 | - | CEILING HEIGHT VARIES. SEE BULKHEAD DETAIL |
| | | FIN. | LVT | RB | P | P | - | P | P | - | - | |
| | | | | | | | | | - | - | - | |
| 103 | COPY AREA | MAT. | CONC. | | GB | GB | GB | GB | ACT | +3048 | - | |
| | | FIN. | LVT | RB | P | P | P | P | - | - | - | |
| | | | | | | | | | - | - | - | |
| 104 | ADMINISTRATION | MAT. | CONC. | | GB | GB | GB | GB | ACT | +3048 | - | |
| | | FIN. | LVT | RB | P | P | P | P | - | - | - | |
| | | | | | | | | | - | - | - | |
| 105 | UNIV. W/R | MAT. | CONC. | | GB | GB | GB | GB | GWB | +2743 | - | REFER TO ELEVATION FOR EXTENTS OF CT WALL FINISH. REST OF GB TO BE PAINTED. |
| | | FIN. | PCT | PCT | CT | CT | CT | CT | P | - | - | |
| | | | | | | | | | - | - | - | |
| 106 | CONSULT. ROOM 2 | MAT. | CONC. | | GB | GB | GB | GB | ACT | +2590 | - | |
| | | FIN. | LVT | RB | P | P | P | P | - | - | - | |
| | | | | | | | | | - | - | - | |
| 107 | CONSULT. ROOM 1 | MAT. | CONC. | | GB | GB | GB | GB | ACT | +2590 | - | |
| | | FIN. | LVT | RB | P | P | P | P | - | - | - | |
| | | | | | | | | | - | - | - | |
| 108 | OFFICE 1 | MAT. | CONC. | | GB | GB | GB | GB | ACT | +2590 | - | |
| | | FIN. | LINO | RB | P | P | P | P | - | - | - | |
| | | | | | | | | | - | - | - | |
| 109 | OFFICE 2 | MAT. | CONC. | | GB | GB | GB | GB | ACT | +2590 | - | |
| | | FIN. | LINO | RB | P | P | P | P | - | - | - | |
| | | | | | | | | | - | - | - | |
| 110 | OFFICE 3 | MAT. | CONC. | | GB | GB | GB | GB | ACT | +2590 | - | |
| | | FIN. | LINO | RB | P | P | P | P | - | - | - | |
| | | | | | | | | | - | - | - | |
| 111 | CUBICLES/ WORKSTATIONS | MAT. | CONC. | | GB | GB | GB | GB | ACT | +3048 | - | |
| | | FIN. | LINO | RB | P | P | P | P | - | - | - | |
| | | | | | | | | | - | - | - | |
| 111B | CLOSET | MAT. | CONC. | | GB | GB | GB | GB | ACT | +2438 | | |
| | | FIN. | LINO | RB | P | P | P | P | - | | | |
| | | | | | | | | | - | | | |
| 112 | OFFICE STORAGE | MAT. | CONC. | | EXIST | GB | GB | EXIST/GB | ACT | +2743 | - | |
| | | FIN. | LVT | RB | P | P | P | P | - | - | - | |
| | | | | | | | | | - | - | - | |
| 113 | PHONE RM. 1 | MAT. | CONC. | | GB | EXIST | GB | GB | ACT | +2438 | - | |
| | | FIN. | LINO | RB | P | P | P | P | - | - | - | |
| | | | | | | | | | - | - | - | |
| 114 | PHONE RM. 2 | MAT. | CONC. | | GB | GB | GB | GB | ACT | +2438 | - | |
| | | FIN. | LINO | RB | P | P | P | P | - | - | - | |
| | | | | | | | | | - | - | - | |
| 115 | FILE ROOM | MAT. | CONC. | | GB | GB | GB | GB | ACT | +2743 | - | |
| | | FIN. | LVT | RB | P | P | P | P | - | - | - | |
| | | | | | | | | | - | - | - | |
| 116 | PAN | MAT. | CONC. | | GB | GB | GB | GB | ACT | +2743 | - | |
| | | FIN. | LINO | LINO | P | P | P | P | - | - | - | |
| | | | | | | | | | - | - | - | |
| 117 | STERILIZATION ROOM | MAT. | CONC. | | GB | GB | GB | GB | ACT | +2743 | - | |
| | | FIN. | LINO | LINO | P | P | P | P | - | - | - | |
| | | | | | | | | | - | - | - | |
| 118 | OPERATORY 1 | MAT. | CONC. | | GB | GB | GB | GB | ACT | +2743 | - | |
| | | FIN. | LINO | LINO | P | P | P | P | - | - | - | |
| | | | | | | | | | - | - | - | |
| 119 | OPERATORY 2 | MAT. | CONC. | | GB | GB | GB | GB | ACT | +2743 | - | |
| | | FIN. | LINO | LINO | P | P | P | P | - | - | - | |
| | | | | | | | | | - | - | - | |
| 120 | OPERATORY 3 | MAT. | CONC. | | GB | GB | GB | GB | ACT | +2743 | - | |
| | | FIN. | LINO | LINO | P | P | P | P | - | - | - | |
| | | | | | | | | | - | - | - | |
| 121 | OPERATORY 4 | MAT. | CONC. | | GB | GB | GB | GB | ACT | +2743 | - | |
| | | FIN. | LINO | LINO | P | P | P | P | - | - | - | |
| | | | | | | | | | - | - | - | |
| 122 | OPERATORY 5 | MAT. | CONC. | | GB | GB | GB | GB | ACT | +2743 | - | |
| | | FIN. | LINO | LINO | P | P | P | P | - | - | - | |
| | | | | | | | | | - | - | - | |
| 123 | COMPRESSOR ROOM | MAT. | CONC. | | GB | GB | GB | GB | - | +2743 | - | |
| | | FIN. | SFF | RB | P | P | P | P | - | - | - | |
| | | | | | | | | | - | - | - | |
| 123B | O&N CLOSET | MAT. | CONC. | | GB | GB | GB | GB | - | +2743 | - | |
| | | FIN. | SFF | RB | P | P | P | P | - | - | - | |
| | | | | | | | | | - | - | - | |
| 124 | OPERATORY 6 | MAT. | CONC. | | GB | GB | GB | GB | ACT | +2743 | - | |
| | | FIN. | LINO | LINO | P | P | P | P | - | - | - | |
| | | | | | | | | | - | - | - | |
| 125 | OPERATORY 7 | MAT. | CONC. | | GB | GB | GB | GB | ACT | +2743 | - | |
| | | FIN. | LINO | LINO | P | P | P | P | - | - | - | |
| | | | | | | | | | - | - | - | |
| 126 | MEETING ROOM | MAT. | CONC. | | GB/GL | EXIST | GB | GB | ACT | +3048 | - | |
| | | FIN. | LVT | RB | P | P | P | P | - | - | - | |
| | | | | | | | | | - | - | - | |
| 127 | KITCHEN | MAT. | CONC. | | GB/GL | GB | GB | GB | ACT | +2743 | - | |
| | | FIN. | LVT | RB | P | P | P | P | - | - | - | |
| | | | | | | | | | - | - | - | |
| 128 | LOCKERS | MAT. | CONC. | | GB/GL | GB | GB | GB | ACT | +2743 | - | |
| | | FIN. | LVT | RB | P | P | P | P | - | - | - | |
| | | | | | | | | | - | - | - | |
| 129 | DENTURIST LAB | MAT. | CONC. | | GB | GB | GB | GB | ACT | +2743 | - | |
| | | FIN. | LINO | LINO | P | P | P | P | - | - | - | |
| | | | | | | | | | - | - | - | |
| 130 | I.T./ELEC. | MAT. | CONC. | | GB | GB | GB | GB | ACT | +2743 | - | |
| | | FIN. | SFF | RB | P | P | P | P | - | - | - | |
| | | | | | | | | | - | - | - | |
| 131 | CUSTODIAL | MAT. | CONC. | | GB | EXIST | GB | GB | GWB | +2743 | - | |
| | | FIN. | LINO | LINO | P | P | P | P | - | - | - | |
| | | | | | | | | | - | - | - | |
| 132 | EX. MEN W/R | MAT. | CONC. | | GB | GB | GB | GB | EX. GWB | +2760 | - | REFER TO ELEVATION FOR EXTENTS OF CT WALL FINISH. REST OF GB TO BE PAINTED. |
| | | FIN. | PCT | PCT | CT | CT | CT | CT | P | - | - | |
| | | | | | | | | | - | - | - | |
| 133 | EX. WOMEN W/R | MAT. | CONC. | | GB | GB | GB | GB | EX. GWB | +2760 | - | REFER TO ELEVATION FOR EXTENTS OF CT WALL FINISH. REST OF GB TO BE PAINTED. |
| | | FIN. | PCT | PCT | CT | CT | CT | CT | P | - | - | |
| | | | | | | | | | - | - | - | |

NOTE: ALL DIMENSIONS ARE IN METRES UNLESS OTHERWISE NOTED.

ALL MEASUREMENTS ARE TO BE VERIFIED BY THE CONTRACTOR ON SITE AND ANY DISCREPANCIES ARE TO BE REPORTED BEFORE PROCEEDING WITH THE WORK. THE REGION OF DURHAM ASSUMES NO RESPONSIBILITY FOR THE ACCURACY OF THE LOCATION OF EXISTING SERVICES AS INDICATED ON THIS DRAWING. DO NOT SCALE DRAWINGS.

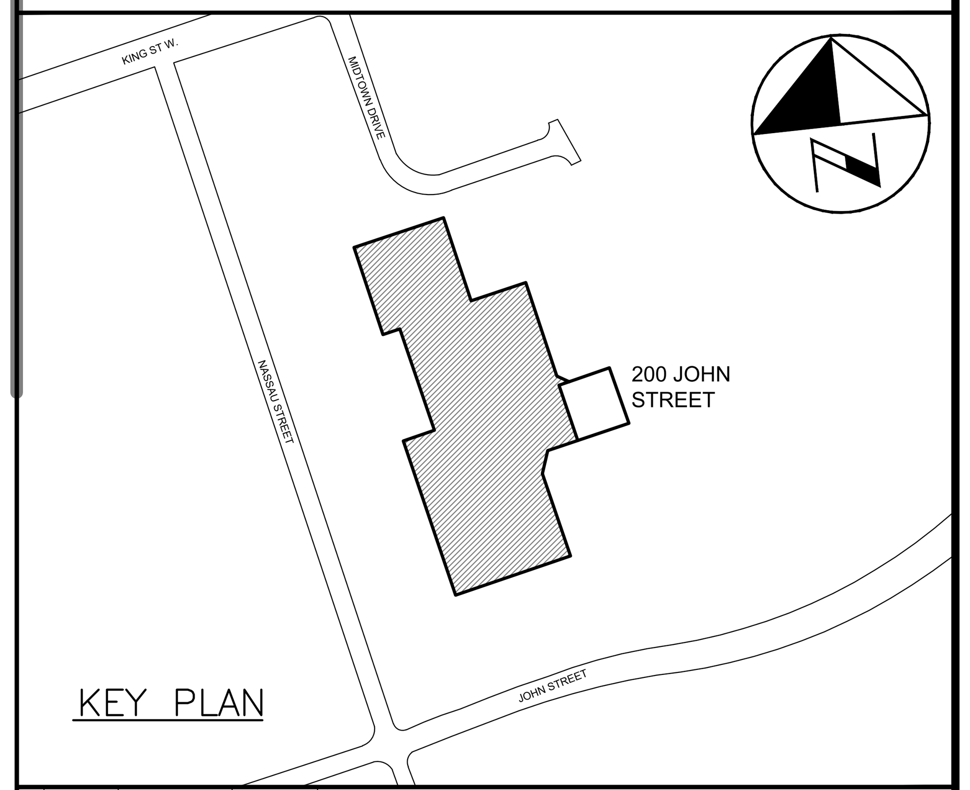


KEY PLAN

CONSULTANT REVISIONS

| NO. | DATE | NAME | REVISIONS |
|---|---|---|---|

PRIME CONSULTANT

BARRY BRYAN ASSOCIATES
Architects
Engineers
Project Managers
250 Water St.
Suite 201
Whitby, Ontario
L1N 0G5
Tel: (905) 666-5252
Fax: (905) 666-5256
e-mail: bba@bba-archeng.com

ONTARIO ASSOCIATION OF ARCHITECTS
ISSUED FOR PERMIT
WM WEIMA FEB 17/21
WILLIAM WEIMA
LICENCE 4910
20060

SUB-CONSULTANT

| | | | |
|---|---|---|---|
| DESIGN BY: | BBA | SCALE | N.T.S. |
| DRAWN BY: | LQ/KM | DATE: | 2021-03-24 |
| CHECKED BY: | CM | CONSULTANT PROJECT NO. | 20060 |
| APPROVED BY: | WW | | |

CONTRACT REVISIONS

| NO. | DATE | NAME | REVISIONS |
|---|---|---|---|
| 5 | FEB 12/21 | BBA | ISSUED FOR PERMIT & TENDER |
| 4 | JAN 13/21 | BBA | RE-ISSUED FOR 90% CLIENT REVIEW |
| 3 | NOV 5/20 | BBA | ISSUED FOR 90% CLIENT REVIEW |
| 2 | AUG 14/20 | BBA | ISSUED FOR REVISED 60% CLIENT REVIEW |
| 1 | MAY 27/20 | BBA | ISSUED FOR 60% CLIENT REVIEW |

DURHAM REGION

THE REGIONAL MUNICIPALITY OF DURHAM

WORKS DEPARTMENT

DESIGN, CONSTRUCTION & ASSET MANAGEMENT

# RELOCATION OF DENTAL CLINIC TO 200 JOHN ST., OSHAWA

## SCHEDULES

| | | |
|---|---|---|
| PROPERTY NO. N/A | FACILITY CODE LEA-0-07 | FACILITIES PROJECT NO. LEA-0-07-19-01 |
| CONTRACT NO. T-1032-2021 | DRAWING NO. A-017 | SHEET NO. 017 |

\\filesrv\Project Data\2020\20060 Durham Region-New Dental Clinic, 200 John St. W, Oshawa\Drawings\Current\20060 A-017 SCHEDULES.dwg

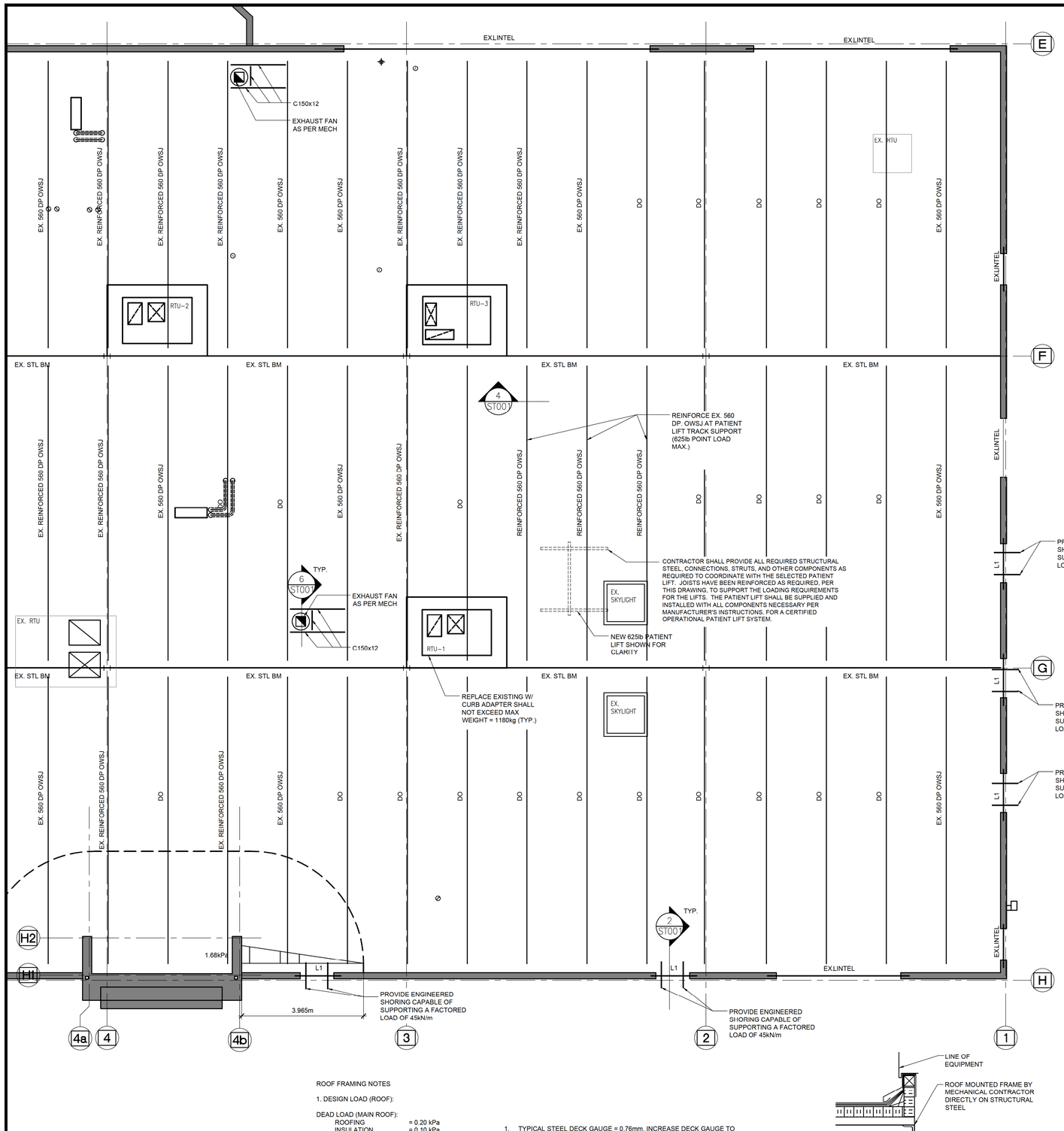


## GENERAL NOTES

1. ALL DIMENSIONS AND ELEVATIONS ARE IN MILLIMETRES UNLESS NOTED OTHERWISE.
2. SITE VERIFY ALL DIMENSIONS PRIOR TO CONSTRUCTION. REPORT ANY DISCREPANCIES TO THE STRUCTURAL CONSULTANT.
3. ALL MATERIALS AND WORKMANSHIP SHALL CONFORM TO THE REQUIREMENTS OF THE ONTARIO BUILDING CODE, LATEST EDITION.
4. CONFORM TO OWNER'S GENERAL SPECIFICATIONS INCLUDING ALL SAFETY REQUIREMENTS.
5. KEEP THE SITE THROUGHOUT THE WORK AREA IN A CLEAN AND ORDERLY CONDITION AT ALL TIMES TO THE SATISFACTION OF THE OWNER.
6. THE LATEST EDITION OF ALL CODES AND STANDARDS SHALL BE USED.
7. ALL STRUCTURAL DRAWINGS ARE TO BE READ IN CONJUNCTION WITH OTHER CONSULTANTS DRAWINGS.

## STRUCTURAL STEEL

1. STRUCTURAL STEEL HSS SHALL BE G40.21M-350W CLASS C. W SECTIONS SHALL BE G40.21M-350W. ALL OTHERS SHALL BE G40.21M-300W
2. DESIGN FORCES INDICATED ON DRAWINGS FOR STRUCTURAL STEEL WORK ARE UN-FACTORED FORCES UNLESS NOTED OTHERWISE.
3. FABRICATION, ERECTION AND WORKMANSHIP SHALL CONFORM TO CSA S16.1, LATEST EDITION.
4. ALL WELDING SHALL CONFORM TO CSA W59 AND SHALL BE PERFORMED BY A WELDER QUALIFIED UNDER CSA W47.
5. ALL CONNECTIONS SHALL BE WELDED USING E49XX ELECTRODES OR BOLTED USING ASTM A325 HIGH STRENGTH BOLTS.
6. ALL STRUCTURAL STEEL SHALL BE PAINTED WITH ONE SHOP APPLIED COAT OF PRIMER. SPOT PRIME ALL WELDED AREAS. SPOT PRIME AS REQUIRED.
7. REMOVE PAINT FILM FROM ALL STEEL SURFACES TO BE WELDED.
8. DO NOT CUT OR CORE ANY OPENINGS IN ANY STRUCTURAL STEEL MEMBERS WITHOUT PRIOR APPROVAL FROM THE STRUCTURAL ENGINEER
9. WHERE A STRUCTURAL STEEL SHAPE SHOWN ON THE DRAWINGS IS UNAVAILABLE, A SHAPE OF EQUAL OR GREATER SECTION PROPERTIES AND STRUCTURAL CAPACITY SHALL BE SUBSTITUTED UPON APPROVAL BY OWNER AND CONSULTANT AT NO EXTRA COST.

## CONCRETE

1. CUTTING AND PATCHING: WHERE INDICATED ON ARCHITECTURAL DRAWINGS. PROVIDE 25MPa CONCRETE TO PATCH ALL FLOORS WHERE SAWCUT FOR NEW BURIED SERVICES.

## LINTEL SCHEDULE

| MARK | SIZE | REMARKS |
|---|---|---|
| L1 | (2) - L127x89x6.4 (LLV) + L89x89x6.4 SHELF ANGLE | |

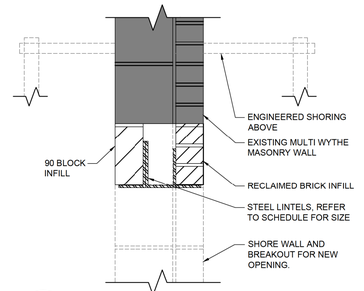


2 ST001 TYP. LINTEL DETAIL 1:10

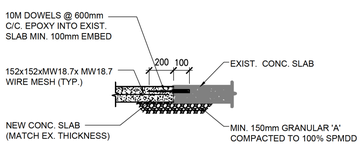


3 ST001 TYP. SLAB REPAIR DETAIL 1:20

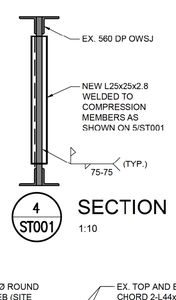


4 ST001 SECTION 1:10

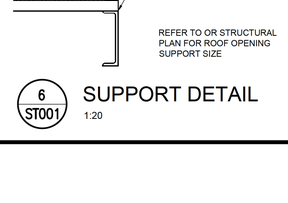


6 ST001 SUPPORT DETAIL 1:20

5 ST001 OWSJ REINFORCING REQUIREMENTS 1:50

ROOF FRAMING NOTES

1. DESIGN LOAD (ROOF):

DEAD LOAD (MAIN ROOF):

| | |
|---|---|
| ROOFING | = 0.20 kPa |
| INSULATION | = 0.10 kPa |
| STEEL DECK | = 0.15 kPa |
| FRAMING | = 0.25 kPa |
| M/E | = 0.25 kPa |
| ACOUSTIC CEILING | = 0.30 kPa |
| | 1.25 kPa |

LIVE LOAD = 1.0 kPa

SNOW LOAD = 1.52 kPa (BASIC) + ACCUMULATION

1. TYPICAL STEEL DECK GAUGE = 0.76mm. INCREASE DECK GAUGE TO SUIT SNOW ACCUMULATION OR RAIN LOADS.
2. REFER TO ARCHITECTURAL AND MECHANICAL DRAWINGS FOR SIZE AND LOCATION OF ALL MECHANICAL UNITS AND OPENINGS IN ROOF DECK NOT INDICATED ON STRUCTURAL DRAWINGS.
3. PROVIDE C150x12 AROUND ALL ROOF-TOP UNITS AND HATCHES U.N.O.
4. DO NOT ATTACH SUSPENDED CEILING DIRECTLY TO ROOF DECK.

1 ST001 ROOF FRAMING PLAN 1:75

NOTE: ALL DIMENSIONS ARE IN METRES UNLESS OTHERWISE NOTED.

ALL MEASUREMENTS ARE TO BE VERIFIED BY THE CONTRACTOR ON SITE AND ANY DISCREPANCIES ARE TO BE REPORTED BEFORE PROCEEDING WITH THE WORK. THE REGION OF DURHAM ASSUMES NO RESPONSIBILITY FOR THE ACCURACY OF THE LOCATION OF EXISTING SERVICES AS INDICATED ON THIS DRAWING. DO NOT SCALE DRAWINGS.

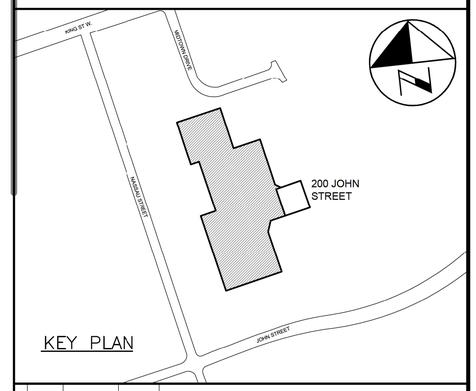


KEY PLAN

| CONSULTANT REVISIONS | NO. | DATE | NAME | REVISIONS |
|---|---|---|---|---|
| | | | | |

PRIME CONSULTANT

BARRY BRYAN ASSOCIATES
Architects
Engineers
Project Managers
250 Water St.
Suite 201
Whitby, Ontario
L1N 0G5
Tel: (905) 666-5252
Fax: (905) 666-5256
e-mail: bba@bba-archeng.com

ONTARIO ASSOCIATION OF ARCHITECTS — WILLIAM WEIMA — LICENCE 4910 — FEB 17/21

SUB-CONSULTANT

LICENSED PROFESSIONAL ENGINEER — 2021-03-25 — D. J. BOVILL — 100166472 — PROVINCE OF ONTARIO

| | |
|---|---|
| DESIGN BY: LH | SCALE 1:75 |
| DRAWN BY: KM | DATE: 2021-02-24 |
| CHECKED BY: BK | CONSULTANT PROJECT NO. 20060 |
| APPROVED BY: WW | |

| CONTRACT REVISIONS | NO. | DATE | NAME | REVISIONS |
|---|---|---|---|---|
| | 5 | FEB 12/21 | BBA | ISSUED FOR PERMIT & TENDER |
| | 4 | JAN 13/21 | BBA | RE-ISSUED FOR 90% CLIENT REVIEW |
| | 3 | NOV 5/20 | BBA | ISSUED FOR 90% CLIENT REVIEW |
| | 2 | AUG 14/20 | BBA | ISSUED FOR REVISED 60% CLIENT REVIEW |
| | 1 | MAY 27/20 | BDA | ISSUED FOR 60% CLIENT REVIEW |

THE REGIONAL MUNICIPALITY OF DURHAM
WORKS DEPARTMENT
DESIGN, CONSTRUCTION & ASSET MANAGEMENT

# RELOCATION OF DENTAL CLINIC TO 200 JOHN ST., OSHAWA

## ROOF FRAMING PLAN, GENERAL NOTES, TYPICAL DETAILS & SCHEDULE

| PROPERTY NO. | FACILITY CODE | FACILITIES PROJECT NO. |
|---|---|---|
| N/A | LEA-O-07 | LEA-O-07-19-01 |
| CONTRACT NO. | DRAWING NO. | SHEET NO. |
| T-1032-2021 | ST-001 | 018 |

\\flesrv\Project Data\2020\20060 Durham Region-New Dental Clinic, 200 John St. W, Oshawa\Drawings\Current\20060 ST-001 ROOF FRAMING.dwg

## HVAC DEMOLITION NOTES

1. EXISTING ROOFTOP UNIT AND ASSOCIATED DUCTWORK TO BE REMOVED. REMOVE ASSOCIATED BYPASS DAMPER, ZONE PANEL AND ALL OTHER VVT SYSTEM CONTROLS.
2. EXISTING DIFFUSER AND ASSOCIATED DUCTWORK TO BE REMOVED (TYPICAL).
3. EXISTING RETURN GRILLE TO BE REMOVED (TYPICAL).
4. EXISTING WALL MOUNTED AC-UNIT TO BE REMOVED. REMOVE CONDENSING UNIT MOUNTED IN CEILING SPACE AND ASSOCIATED REFRIGERATION PIPING.
5. EXISTING ZONE DAMPER AND ASSOCIATED DUCTWORK/CONTROLS TO BE REMOVED (TYPICAL).
6. EXISTING ABANDONED DUCTWORK TO BE REMOVED.
7. EXISTING EXHAUST FAN AND ASSOCIATED DUCTWORK TO BE REMOVED.
8. EXISTING EXHAUST DIFFUSER AND ASSOCIATED DUCTWORK TO BE REMOVED AS INDICATED (TYPICAL).
9. EXISTING ROUND CONE SUPPLY DIFFUSER TO BE REMOVED.
10. EXISTING FORCE FLOW HEATER TO BE REMOVED.
11. EXISTING ABANDONED THERMOSTAT TO BE REMOVED.

## GENERAL NOTES

1. CONTRACTOR TO VERIFY EXACT SIZE AND LOCATION OF ALL HVAC SYSTEM COMPONENTS PRIOR TO COMMENCING WORK. REPORT DISCREPANCIES TO ENGINEER.
2. ALL COMPONENTS BEING REMOVED ARE TO BE DISPOSED OF UNLESS OTHERWISE SPECIFIED.
3. EXISTING RTU'S TO BE RETAINED AND STORED AT 175 KING ST IN ACCORDANCE WITH LANDLORD'S INSTRUCTIONS.

ALL MEASUREMENTS ARE TO BE VERIFIED BY THE CONTRACTOR ON SITE AND ANY DISCREPANCIES ARE TO BE REPORTED BEFORE PROCEEDING WITH THE WORK. THE REGION OF DURHAM ASSUMES NO RESPONSIBILITY FOR THE ACCURACY OF THE LOCATION OF EXISTING SERVICES AS INDICATED ON THIS DRAWING. DO NOT SCALE DRAWINGS.

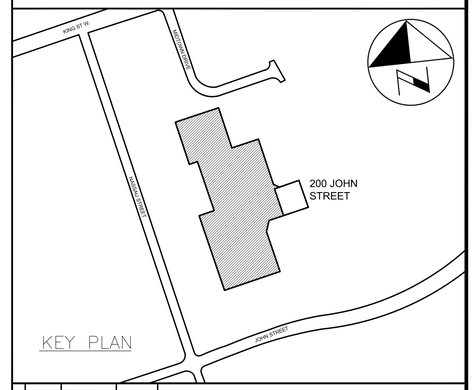


KEY PLAN

CONSULTANT REVISIONS

| NO. | DATE | NAME | REVISIONS |
|---|---|---|---|
| | | | |
| | | | |
| | | | |
| | | | |
| | | | |
| | | | |
| | | | |
| | | | |

PRIME CONSULTANT

BARRY BRYAN ASSOCIATES
Architects
Engineers
Project Managers
250 Water St.
Suite 201
Whitby, Ontario
L1N 0G5
Tel: (905) 666-5252
Fax: (905) 666-5256
e-mail: bba@bba-arcneng.com

SUB-CONSULTANT

MADONNA ENGINEERING INC.
93 Woodstream Blvd Unit 10
Woodbridge, Ontario L4L 7Y7
Tel: (905) 265 1911 Fax: (905) 265 1998

LICENSED PROFESSIONAL ENGINEER
MAR 25 2021
A.A. MADONNA
PROVINCE OF ONTARIO

| | |
|---|---|
| DESIGN BY: JM | SCALE 1:75 |
| DRAWN BY: JM | DATE: FEB 2021 |
| CHECKED BY: AM | CONSULTANT PROJECT NO. 20-0033 |
| APPROVED BY: | |

CONTRACT REVISIONS

| NO. | DATE | NAME | REVISIONS |
|---|---|---|---|
| | | | |
| | | | |
| | | | |
| | | | |
| 4 | MAR 25/21 | JM | ISSUED FOR PERMIT/TENDER |
| 3 | JAN 13/21 | JM | ISSUED FOR 90% CLIENT REVIEW |
| 2 | OCT 30/20 | JM | ISSUED FOR 90% CLIENT REVIEW |
| 1 | JUN 01/20 | JM | ISSUED FOR 60% CLIENT REVIEW |

THE REGIONAL MUNICIPALITY OF DURHAM
WORKS DEPARTMENT
DESIGN, CONSTRUCTION & ASSET MANAGEMENT

# RELOCATION OF DENTAL CLINIC TO 200 JOHN ST., OSHAWA
# GROUND FLOOR PLAN - HVAC DEMOLITION

| PROPERTY NO. | FACILITY CODE | FACILITIES PROJECT NO. |
|---|---|---|
| N/A | LEA-O-07 | LEA-O-07-19-01 |
| CONTRACT NO. | DRAWING NO. | SHEET NO. |
| T-1032-2021 | M-001 | 019 |

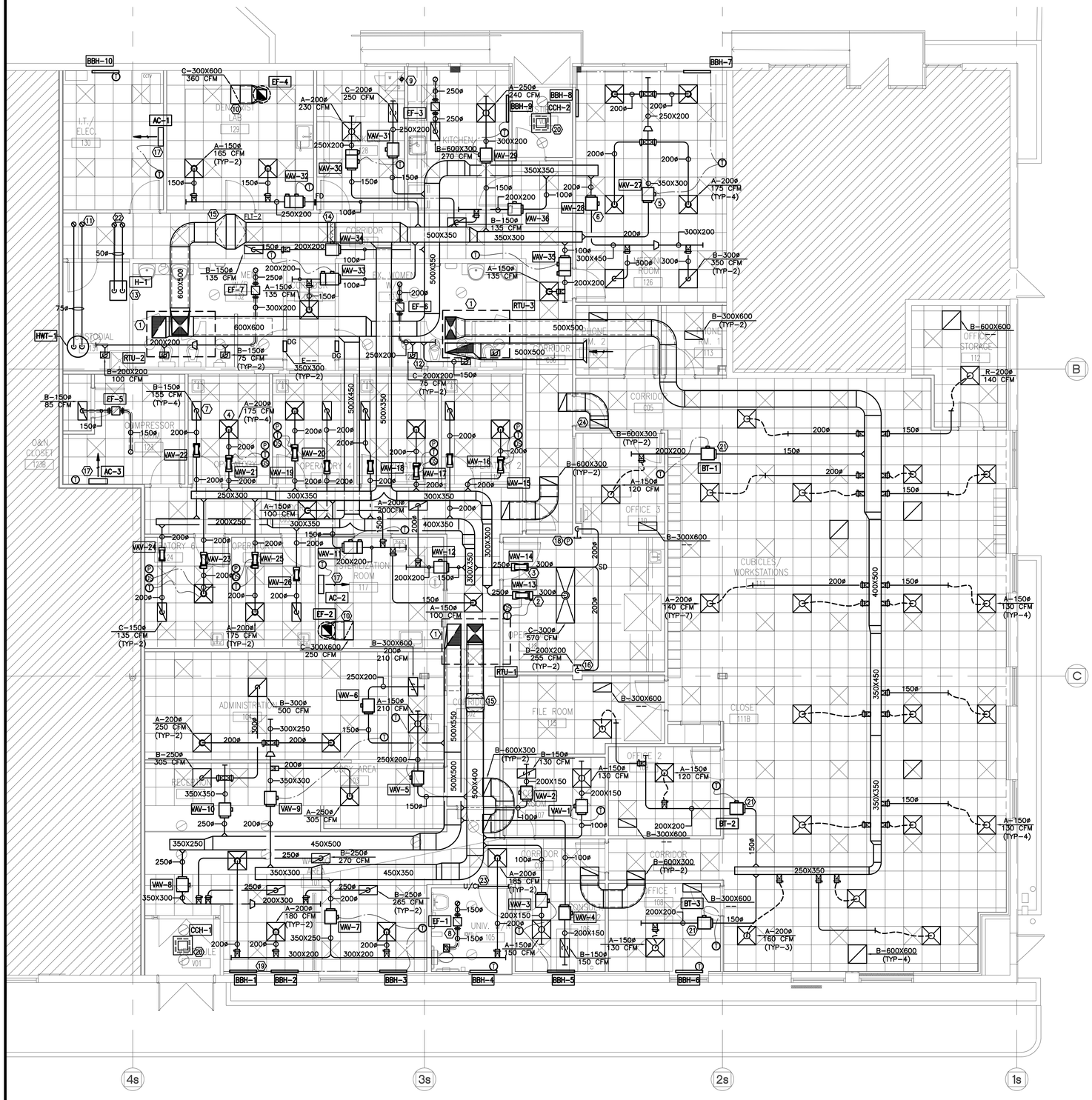


## HVAC CONSTRUCTION NOTES

1. NEW ROOFTOP UNIT AS SPECIFIED. ROUTE NEW SUPPLY/RETURN DUCTWORK ON THRU ROOF AS INDICATED. SIZE DUCTWORK TO MATCH SUPPLY/RETURN COLLAR ON UNIT AND PROVIDE TRANSITION TO SUIT. REFER TO 'DUCTWORK INSULATION SCHEDULE' FOR INSULATION DETAILS.
2. NEW SUPPLY AIR VENTURI VALVE AS SPECIFIED. REFER TO 'VAV TERMINAL SCHEDULE' FOR REHEAT AND BALANCING INFO (TYPICAL).
3. NEW RETURN AIR VENTURI VALVE AS SPECIFIED. REFER TO 'VAV TERMINAL SCHEDULE' FOR BALANCING INFO.
4. NEW SUPPLY AIR DIFFUSER AS SPECIFIED (TYPICAL).
5. NEW SUPPLY AIR VAV TERMINAL AND ASSOCIATED DUCTWORK. REFER TO 'VAV TERMINAL SCHEDULE' FOR REHEAT AND BALANCING INFO (TYPICAL).
6. NEW RETURN AIR VAV TERMINAL AND ASSOCIATED DUCTWORK. REFER TO 'VAV TERMINAL SCHEDULE' AND FOR INFO (TYPICAL).
7. NEW RETURN GRILLE C/W DUCT CONNECTION AS SPECIFIED (TYPICAL).
8. NEW INLINE EXHAUST FAN AS SPECIFIED. TERMINATE DUCTWORK UP THRU ROOF C/W GOOSENECK TERMINATION. REFER TO DETAILS (TYPICAL).
9. NEW 100ø VENT TO DRYER OUTLET. VENT MATERIAL SHALL BE RIGID DUCT SUITABLE FOR DRYER VENTING AS PER MANUFACTURER'S INSTALLATION INSTRUCTION. ROUTE DRYER VENTING UP THROUGH ROOF.
10. NEW EXHAUST DUCTWORK ON FROM ROOF MOUNTED EXHAUST FAN. PROVIDE NEW EXHAUST GRILLE AS SPECIFIED. BALANCE EXHAUST FLOW RATE AS INDICATED.
11. NEW 75ø COMBUSTION AND INTAKE PIPING FOR HWT. INSTALL AS PER MANUFACTURERS INSTRUCTIONS.
12. NEW EXHAUST GRILLE C/W DUCT CONNECTION AS SPECIFIED. PROVIDE ASSOCIATED DUCTWORK AS INDICATED (TYPICAL).
13. NEW HUMIDIFIER AS SPECIFIED. REFER TO M-3 FOR ROUTING OF ASSOCIATED PIPING (TYP-2).
14. NEW DUCT MOUNTED STEAM MANIFOLD AS SPECIFIED.
15. NEW INLINE DUCT FILTER AS SPECIFIED. PROVIDE DUCT TRANSITION TO SUIT (TYP-2).
16. NEW RETURN AIR DUCTWORK ON THRU DUCT SHAFT C/W WALL MOUNTED GRILLE @ LOW LEVEL (TYP-2).
17. NEW WALL MOUNTED AC-UNIT AS SPECIFIED. ASSOCIATED CONDENSING UNIT SHALL BE MOUNTED ON ROOF. REFER TO M-3 FOR REFRIGERATION PIPE ROUTING.
18. NEW ROOM PRESSURE MONITOR AS SPECIFIED (TYPICAL).
19. NEW ELECTRIC BASEBOARD HEATER AS SPECIFIED. REFER TO CONTROL SEQUENCES (TYPICAL).
20. NEW CEILING FAN HEATER AS SPECIFIED (TYP-2).
21. NEW BYPASS TERMINAL AND ASSOCIATED DUCTWORK AS SPECIFIED.
22. NEW 75ø COMBUSTION AND INTAKE PIPING FOR H-2. INSTALL AS PER MANUFACTURERS INSTRUCTIONS.
23. NEW DOOR UNDERCUT AS SHOWN.
24. NEW 600X300 ACOUSTICALLY LINED TRANSFER AIR DUCTWORK C/W GRILLES (TYPICAL)

## GENERAL NOTES

1. INSULATE DUCTWORK AS PER THE "DUCTWORK INSULATION SCHEDULE".
2. MAINTAIN 10'-0" SEPARATION FROM FRESH AIR INTAKE TO ANY EXHAUST/ PLUMBING VENT AND 3'-0" SEPARATION BETWEEN EXHAUST AND PLUMBING VENT AS PER O.B.C.
3. ALL EQUIPMENT ON ROOF TO BE COORDINATED WITH EXISTING EQUIPMENT AND VENT LOCATIONS.
4. ALL DUCTWORK SHALL MEET SMACNA STANDARDS.
5. PROVIDE FIRE DAMPER AT ALL DUCTWORK PENETRATING A FIRE RATED WALL.
6. INSTALL ALL EQUIPMENT PER MANUFACTURER'S INSTRUCTIONS.
7. DUCTWORK PATH SHALL BE COORDINATED ON-SITE WITH EXISTING STRUCTURAL MEMBERS. REPORT ANY DISCREPANCIES TO ENGINEER.
8. ALL DUCT DIMENSIONS ARE CLEAR INSIDE DIMENSIONS. ACTUAL DUCT SIZING SHALL BE INCREASED TO SUIT INTERNAL ACOUSTIC LININGS.
9. ALL DUCT CONNECTIONS HVAC EQUIPMENT BEING SERVED BY RTU 1 & 2 SHALL BE RIGID DUCTWORK. THE USE OF FLEXIBLE DUCTWORK IS NOT PERMITTED IN THE CLINIC ZONE.

ALL MEASUREMENTS ARE TO BE VERIFIED BY THE CONTRACTOR ON SITE AND ANY DISCREPANCIES ARE TO BE REPORTED BEFORE PROCEEDING WITH THE WORK. THE REGION OF DURHAM ASSUMES NO RESPONSIBILITY FOR THE ACCURACY OF THE LOCATION OF EXISTING SERVICES AS INDICATED ON THIS DRAWING. DO NOT SCALE DRAWINGS.

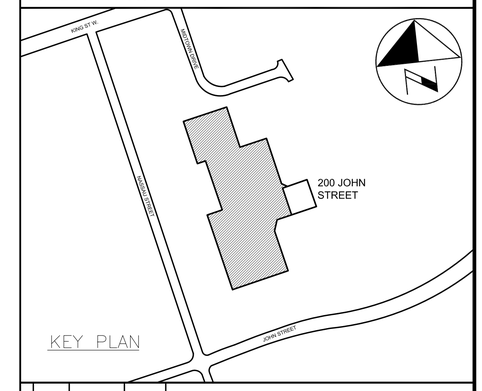


CONSULTANT REVISIONS

| NO. | DATE | NAME | REVISIONS |
|---|---|---|---|


PRIME CONSULTANT

BARRY BRYAN ASSOCIATES
Architects
Engineers
Project Managers
250 Water St,
Suite 201
Whitby, Ontario
L1N 0G5
Tel: (905) 666-5252
Fax: (905) 666-5256
e-mail: bba@bba-archeng.com

SUB-CONSULTANT

MADONNA ENGINEERING INC.
93 Woodstream Blvd Unit 10
Woodbridge, Ontario L4L 7Y7
Tel: (905) 265 1911 Fax: (905) 265 1998


LICENSED PROFESSIONAL ENGINEER — MAR 25 2021 — A.A. MADONNA — PROVINCE OF ONTARIO

| | |
|---|---|
| DESIGN BY: JM | SCALE 1:75 |
| DRAWN BY: JM | DATE: FEB 2021 |
| CHECKED BY: AM | CONSULTANT PROJECT NO. 20-0033 |
| APPROVED BY: | |

CONTRACT REVISIONS

| NO. | DATE | NAME | REVISIONS |
|---|---|---|---|
| 4 | MAR 25/21 | JM | ISSUED FOR PERMIT/TENDER |
| 3 | JAN 13/21 | JM | ISSUED FOR 90% CLIENT REVIEW |
| 2 | OCT 30/20 | JM | ISSUED FOR 90% CLIENT REVIEW |
| 1 | JUN 01/20 | JM | ISSUED FOR 60% CLIENT REVIEW |

DURHAM REGION

THE REGIONAL MUNICIPALITY OF DURHAM
WORKS DEPARTMENT
DESIGN, CONSTRUCTION & ASSET MANAGEMENT

# RELOCATION OF DENTAL CLINIC TO 200 JOHN ST., OSHAWA GROUND FLOOR PLAN – HVAC SHEET METAL

| PROPERTY NO. | FACILITY CODE | FACILITIES PROJECT NO. |
|---|---|---|
| N/A | LEA-O-07 | LEA-O-07-19-01 |
| CONTRACT NO. | DRAWING NO. | SHEET NO. |
| T-1032-2021 | M-002 | 020 |

ALL MEASUREMENTS ARE TO BE VERIFIED BY THE CONTRACTOR ON SITE AND ANY DISCREPANCIES ARE TO BE REPORTED BEFORE PROCEEDING WITH THE WORK. THE REGION OF DURHAM ASSUMES NO RESPONSIBILITY FOR THE ACCURACY OF THE LOCATION OF EXISTING SERVICES AS INDICATED ON THIS DRAWING. DO NOT SCALE DRAWINGS.

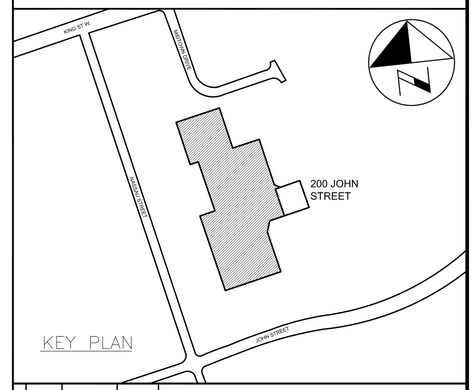


CONSULTANT REVISIONS

| NO. | DATE | NAME | REVISIONS |
|---|---|---|---|
| | | | |

PRIME CONSULTANT

BARRY BRYAN ASSOCIATES
Architects
Engineers
Project Managers
250 Water St.
Suite 201
Whitby, Ontario
L1N 0G5
Tel: (905) 666-5252
Fax: (905) 666-5256
e-mail: bba@bba-archeng.com

SUB-CONSULTANT

MADONNA ENGINEERING INC.
93 Woodstream Blvd Unit 10
Woodbridge, Ontario L4L 7Y7
Tel: (905) 265 1911 Fax: (905) 265 1998

LICENSED PROFESSIONAL ENGINEER
MAR 25 2021
A.A. MADONNA
PROVINCE OF ONTARIO

| | |
|---|---|
| DESIGN BY: JM | SCALE 1:75 |
| DRAWN BY: JM | DATE: FEB 2021 |
| CHECKED BY: AM | CONSULTANT PROJECT NO. 20-0033 |
| APPROVED BY: | |

CONTRACT REVISIONS

| NO. | DATE | NAME | REVISIONS |
|---|---|---|---|
| 2 | MAR 25/21 | JM | ISSUED FOR PERMIT/TENDER |
| 1 | JAN 13/21 | JM | ISSUED FOR 90% CLIENT REVIEW |

THE REGIONAL MUNICIPALITY OF DURHAM
WORKS DEPARTMENT
DESIGN, CONSTRUCTION & ASSET MANAGEMENT

# RELOCATION OF DENTAL CLINIC TO 200 JOHN ST., OSHAWA GROUND FLOOR PLAN - HVAC PIPING

| PROPERTY NO. | FACILITY CODE | FACILITIES PROJECT NO. |
|---|---|---|
| N/A | LEA-O-07 | LEA-O-07-19-01 |
| CONTRACT NO. | DRAWING NO. | SHEET NO. |
| T-1032-2021 | M-003 | 021 |

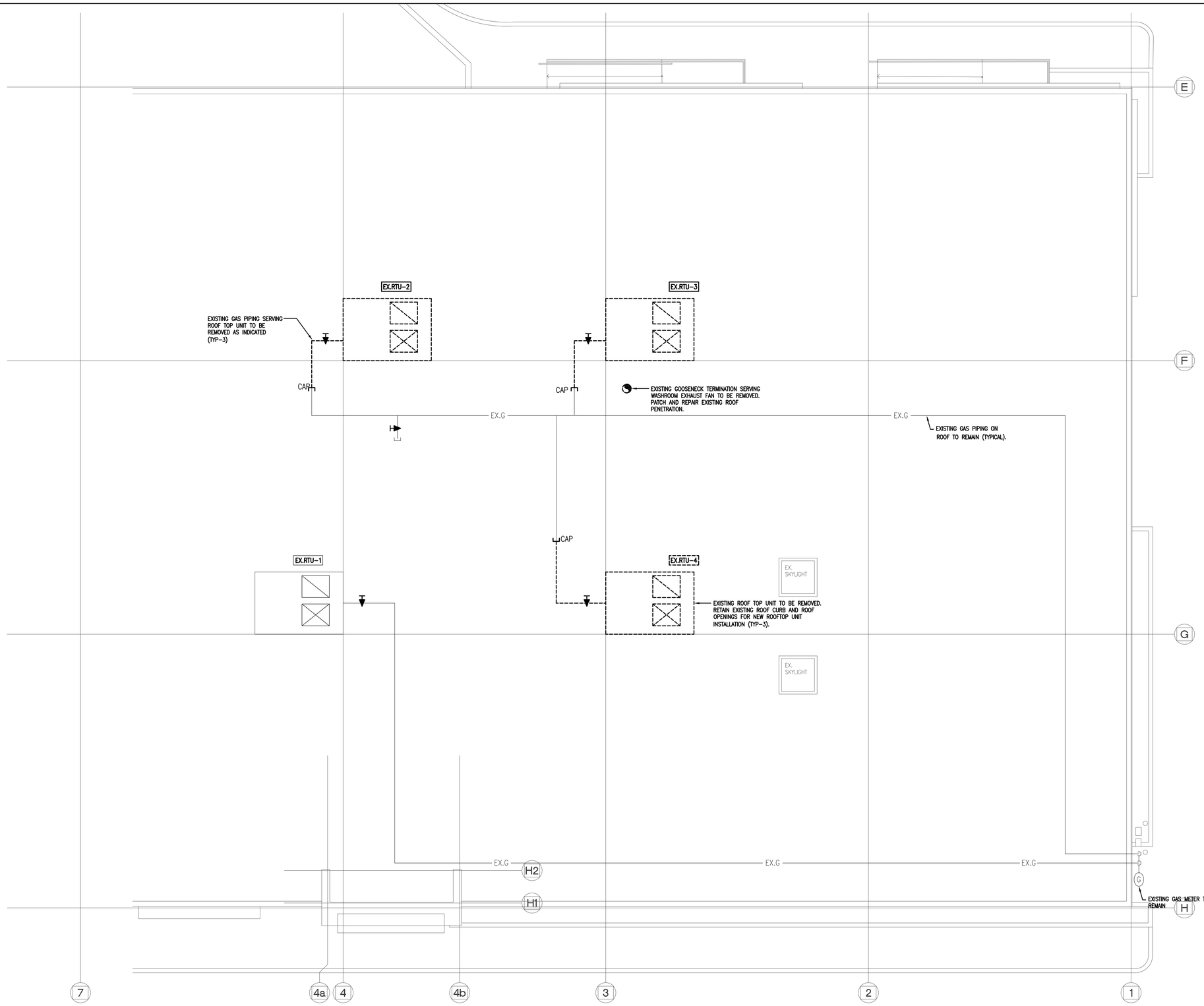


ALL MEASUREMENTS ARE TO BE VERIFIED BY THE CONTRACTOR ON SITE AND ANY DISCREPANCIES ARE TO BE REPORTED BEFORE PROCEEDING WITH THE WORK. THE REGION OF DURHAM ASSUMES NO RESPONSIBILITY FOR THE ACCURACY OF THE LOCATION OF EXISTING SERVICES AS INDICATED ON THIS DRAWING. DO NOT SCALE DRAWINGS.

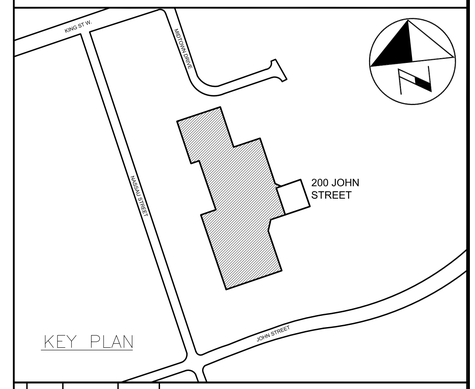


CONSULTANT REVISIONS

| NO. | DATE | NAME | REVISIONS |
|---|---|---|---|
| | | | |
| | | | |
| | | | |
| | | | |
| | | | |
| | | | |
| | | | |
| | | | |

PRIME CONSULTANT


BARRY BRYAN ASSOCIATES
Architects
Engineers
Project Managers
250 Water St.
Suite 201
Whitby, Ontario
L1N 0G5
Tel: (905) 666-5252
Fax: (905) 666-5256
e-mail: bba@bba-archeng.com


SUB-CONSULTANT


MADONNA ENGINEERING INC.
93 Woodstream Blvd Unit 10
Woodbridge, Ontario L4L 7Y7
Tel: (905) 265 1911 Fax: (905) 265 1998


LICENSED PROFESSIONAL ENGINEER
MAR 25 2021
A.A. MADONNA
PROVINCE OF ONTARIO

| | |
|---|---|
| DESIGN BY: JM | SCALE 1:75 |
| DRAWN BY: JM | DATE: FEB 2021 |
| CHECKED BY: AM | CONSULTANT PROJECT NO. 20-0033 |
| APPROVED BY: | |

CONTRACT REVISIONS

| NO. | DATE | NAME | REVISIONS |
|---|---|---|---|
| | | | |
| | | | |
| | | | |
| | | | |
| | | | |
| 3 | MAR 25/21 | JM | ISSUED FOR PERMIT/TENDER |
| 2 | JAN 13/21 | JM | ISSUED FOR 90% CLIENT REVIEW |
| 1 | OCT 30/20 | JM | ISSUED FOR 90% CLIENT REVIEW |

THE REGIONAL MUNICIPALITY OF DURHAM
WORKS DEPARTMENT
DESIGN, CONSTRUCTION & ASSET MANAGEMENT

# RELOCATION OF DENTAL CLINIC TO 200 JOHN ST., OSHAWA
# ROOF PLAN - MECHANICAL DEMOLITION

| PROPERTY NO. | FACILITY CODE | FACILITIES PROJECT NO. |
|---|---|---|
| N/A | LEA-O-07 | LEA-O-07-19-01 |
| CONTRACT NO. | DRAWING NO. | SHEET NO. |
| T-1032-2021 | M-004 | 022 |

ALL MEASUREMENTS ARE TO BE VERIFIED BY THE CONTRACTOR ON SITE AND ANY DISCREPANCIES ARE TO BE REPORTED BEFORE PROCEEDING WITH THE WORK. THE REGION OF DURHAM ASSUMES NO RESPONSIBILITY FOR THE ACCURACY OF THE LOCATION OF EXISTING SERVICES AS INDICATED ON THIS DRAWING. DO NOT SCALE DRAWINGS.

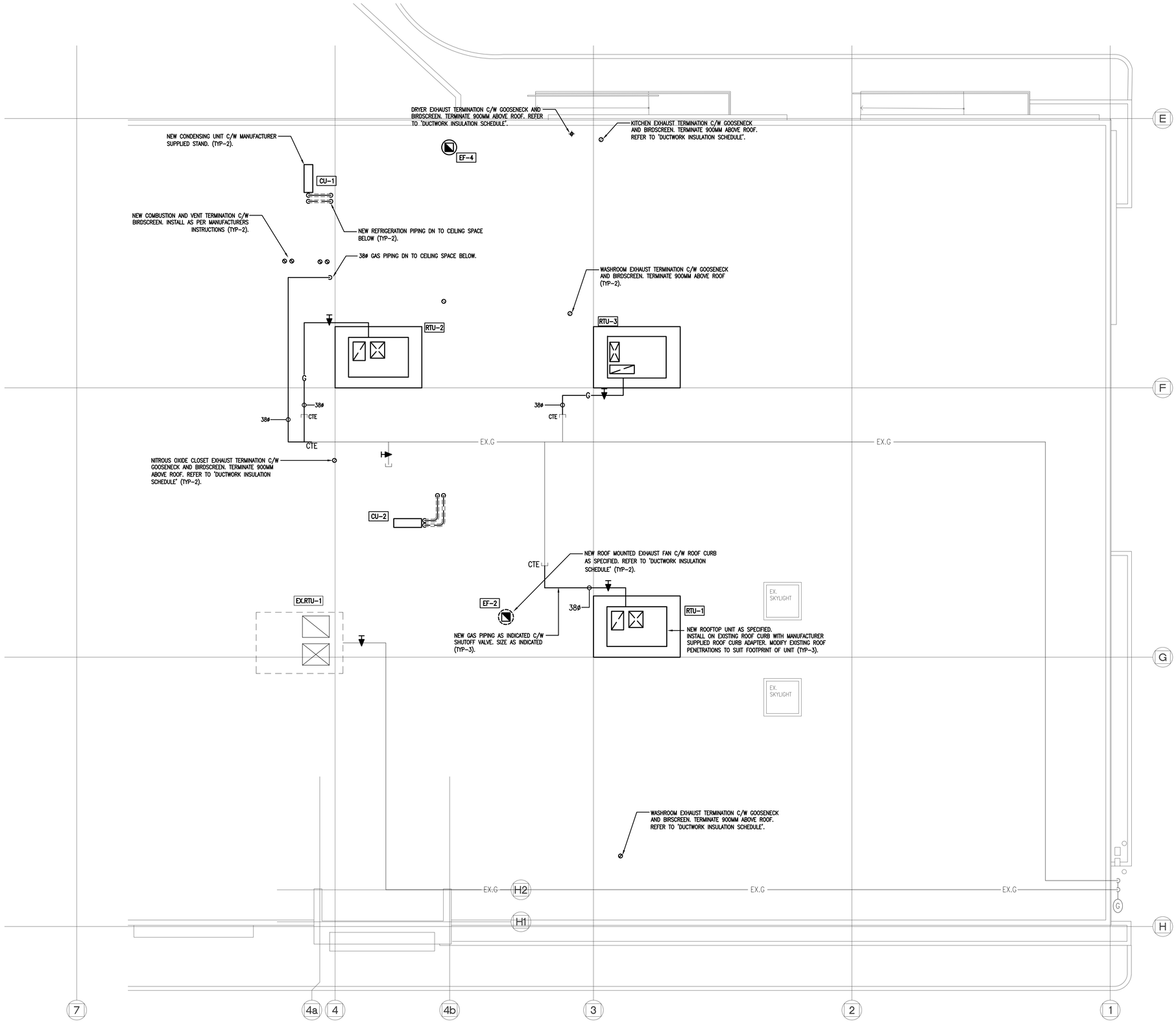


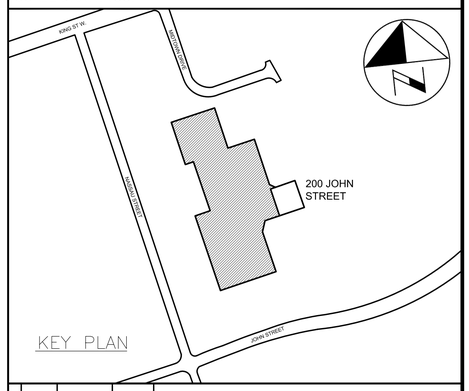


CONSULTANT REVISIONS

| NO. | DATE | NAME | REVISIONS |
|---|---|---|---|
| | | | |

PRIME CONSULTANT

BARRY BRYAN ASSOCIATES
Architects
Engineers
Project Managers
250 Water St.
Suite 201
Whitby, Ontario
L1N 0G5
Tel: (905) 666-5252
Fax: (905) 666-5256
e-mail: bba@bba-archeng.com

SUB-CONSULTANT

MADONNA ENGINEERING INC.
93 Woodstream Blvd Unit 10
Woodbridge, Ontario L4L 7Y7
Tel: (905) 265 1911 Fax: (905) 265 1998

LICENSED PROFESSIONAL ENGINEER — MAR 25 2021 — A.A. MADONNA — PROVINCE OF ONTARIO

| | |
|---|---|
| DESIGN BY: JM | SCALE 1:75 |
| DRAWN BY: JM | DATE: FEB 2021 |
| CHECKED BY: AM | CONSULTANT PROJECT NO. 20-0033 |
| APPROVED BY: | |

CONTRACT REVISIONS

| NO. | DATE | NAME | REVISIONS |
|---|---|---|---|
| 3 | MAR 25/21 | JM | ISSUED FOR PERMIT/TENDER |
| 2 | JAN 13/21 | JM | ISSUED FOR 90% CLIENT REVIEW |
| 1 | OCT 30/20 | JM | ISSUED FOR 90% CLIENT REVIEW |

THE REGIONAL MUNICIPALITY OF DURHAM
WORKS DEPARTMENT
DESIGN, CONSTRUCTION & ASSET MANAGEMENT

# RELOCATION OF DENTAL CLINIC TO 200 JOHN ST., OSHAWA
# ROOF PLAN - MECHANICAL CONSTRUCTION

| PROPERTY NO. | FACILITY CODE | FACILITIES PROJECT NO. |
|---|---|---|
| N/A | LEA-O-07 | LEA-O-07-19-01 |
| CONTRACT NO. | DRAWING NO. | SHEET NO. |
| T-1032-2021 | M-005 | 023 |

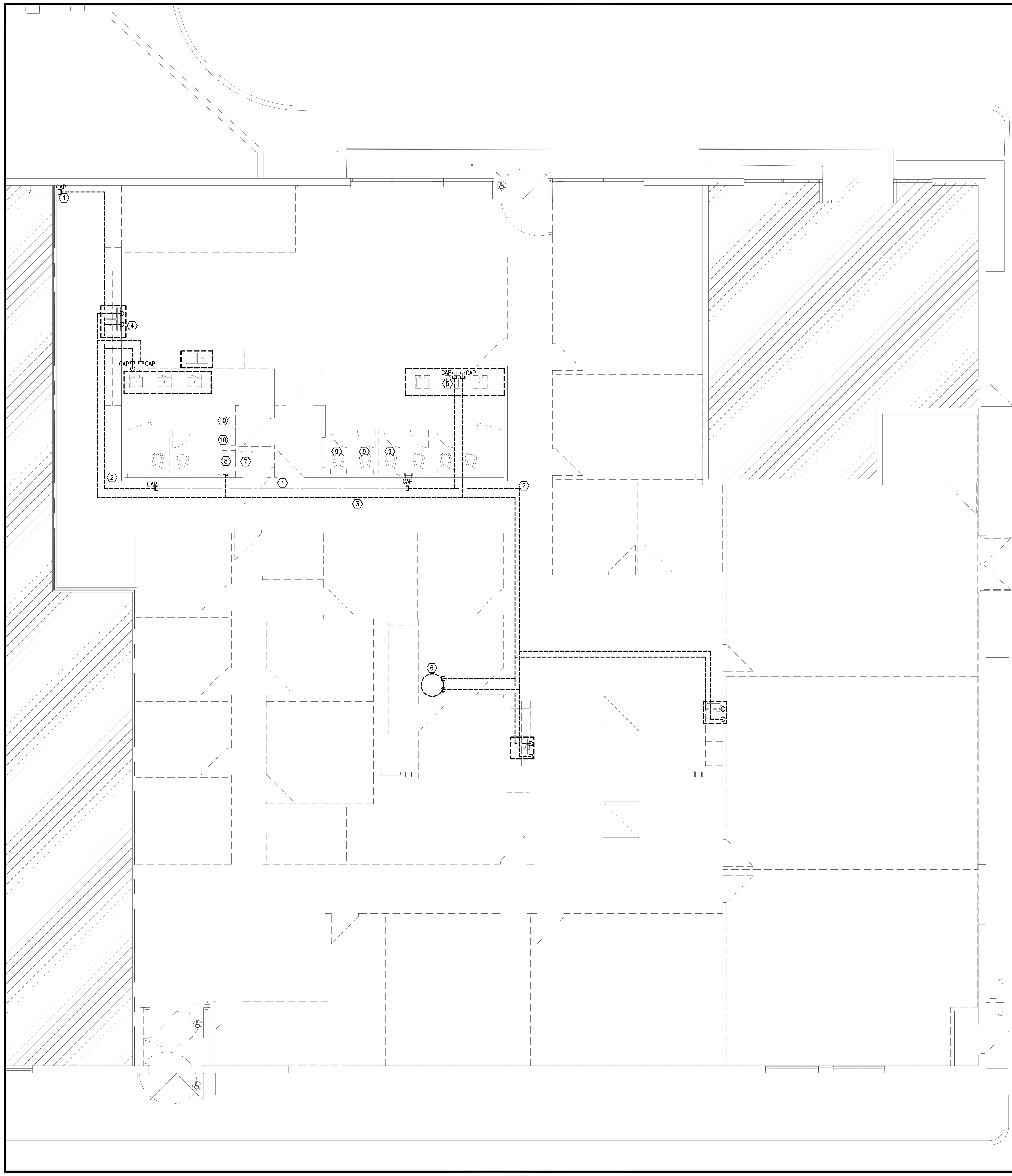


## PLUMBING DEMOLITION NOTES

1. EXISTING DOMESTIC COLD WATER PIPING IN CEILING SPACE TO REMAIN. CAP AS INDICATED FOR FUTURE RE–CONNECTION.
2. EXISTING SECTION OF COLD WATER PIPING IN CEILING SPACE TO BE REMOVED.
3. EXISTING HOT WATER PIPING IN CEILING SPACE TO BE REMOVED.
4. EXISTING SINK TO BE REMOVED. REMOVE ASSOCIATED CW/HW BRANCH PIPING (TYPICAL).
5. EXISTING LAVATORY TO BE REMOVED. REMOVE ASSOCIATED CW/HW BRANCH PIPING AS INDICATED. REWORK EXISTING PLUMBING ROUGH–IN TO SUIT NEW LAVATORIES AS SHOWN ON M–7 . (TYPICAL).
6. EXISTING HOT WATER TANK TO BE REMOVED. REMOVE ASSOCIATED CW/HW PIPING AS INDICATED.
7. EXISTING JANITOR SINK TO BE REMOVED. REMOVE ASSOCIATED CW/HW BRANCH PIPING. CAP COLD WATER BRANCH PIPING AT MAIN.
8. EXISTING URINAL TO BE RELOCATED. REMOVE ASSOCIATED COLD WATER PIPING AND CAP AT MAIN.
9. EXISTING WATER CLOSET TO BE REMOVED. REMOVE ASSOCIATED COLD WATER BRANCH PIPING AND CAP AT MAIN.
10. EXISTING URINAL TO BE REMOVED. REMOVE ASSOCIATED COLD WATER PIPING AND CAP AT MAIN.

## GENERAL NOTES

1. CONTRACTOR TO VERIFY EXACT SIZE AND LOCATION OF ALL PLUMBING SYSTEMS PRIOR TO COMMENCING WORK. REPORT DISCREPANCIES TO ENGINEER.
2. ALL COMPONENTS BEING REMOVED ARE TO BE DISPOSED OF UNLESS OTHERWISE SPECIFIED.

ALL MEASUREMENTS ARE TO BE VERIFIED BY THE CONTRACTOR ON SITE AND ANY DISCREPANCIES ARE TO BE REPORTED BEFORE PROCEEDING WITH THE WORK. THE REGION OF DURHAM ASSUMES NO RESPONSIBILITY FOR THE ACCURACY OF THE LOCATION OF EXISTING SERVICES AS INDICATED ON THIS DRAWING. DO NOT SCALE DRAWINGS.

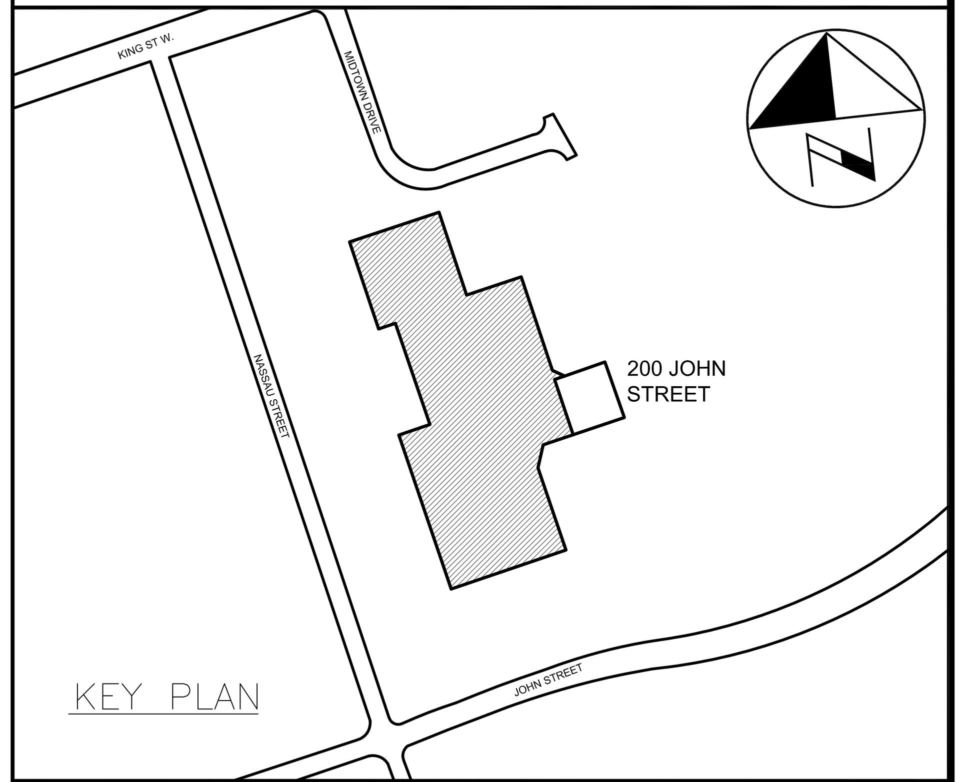


KEY PLAN

CONSULTANT REVISIONS

| NO. | DATE | NAME | REVISIONS |
|---|---|---|---|

PRIME CONSULTANT

BARRY BRYAN ASSOCIATES
Architects
Engineers
Project Managers
250 Water St.
Suite 201
Whitby, Ontario
L1N 0G5
Tel: (905) 666-5252
Fax: (905) 666-5256
e-mail: bba@bba-archeng.com

SUB–CONSULTANT

MADONNA ENGINEERING INC.
93 Woodstream Blvd Unit 10
Woodbridge, Ontario L4L 7Y7
Tel: (905) 265 1911 Fax: (905) 265 1998

LICENSED PROFESSIONAL ENGINEER
MAR 25 2021
A.A. MADONNA
PROVINCE OF ONTARIO

| | |
|---|---|
| DESIGN BY: JM | SCALE 1:75 |
| DRAWN BY: JM | DATE: FEB 2021 |
| CHECKED BY: AM | CONSULTANT PROJECT NO. 20–0033 |
| APPROVED BY: | |

CONTRACT REVISIONS

| NO. | DATE | NAME | REVISIONS |
|---|---|---|---|
| 4 | MAR 25/21 | JM | ISSUED FOR PERMIT/TENDER |
| 3 | JAN 13/21 | JM | ISSUED FOR 90% CLIENT REVIEW |
| 2 | OCT 30/20 | JM | ISSUED FOR 90% CLIENT REVIEW |
| 1 | JUN 01/20 | JM | ISSUED FOR 60% CLIENT REVIEW |

DURHAM REGION

THE REGIONAL MUNICIPALITY OF DURHAM
WORKS DEPARTMENT
DESIGN, CONSTRUCTION & ASSET MANAGEMENT

# RELOCATION OF DENTAL CLINIC TO 200 JOHN ST., OSHAWA PART GROUND FLOOR PLAN – PLUMBING DEMOLITION

| PROPERTY NO. | FACILITY CODE | FACILITIES PROJECT NO. |
|---|---|---|
| N/A | LEA–0–07 | LEA–0–07–19–01 |
| CONTRACT NO. | DRAWING NO. | SHEET NO. |
| T–1032–2021 | M–006 | 024 |

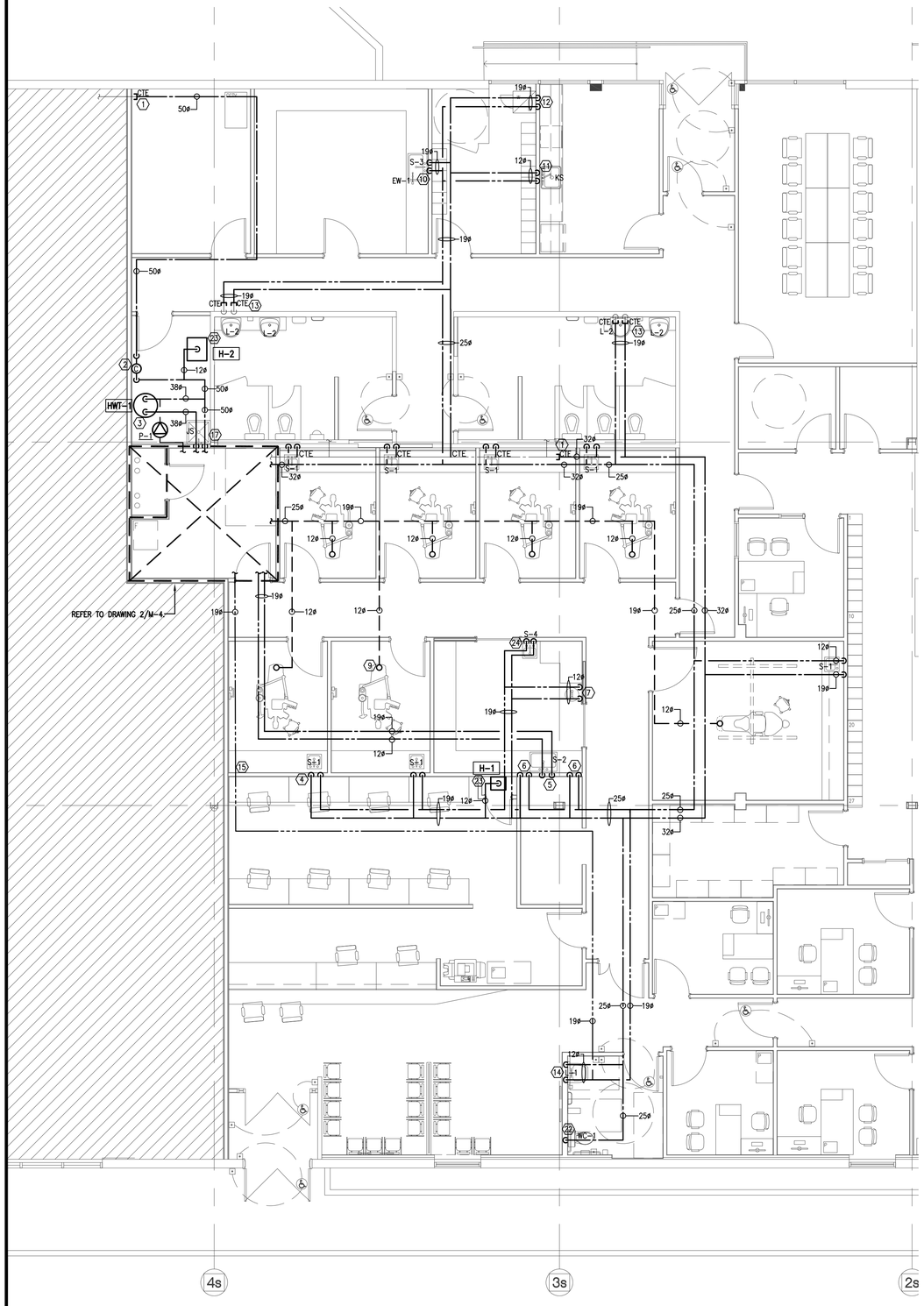


1 M-007 GROUND FLOOR PLAN – PLUMBING CONSTRUCTION

1:75

## PLUMBING DRAWING NOTES

1. NEW COLD WATER PIPING IN CEILING SPACE. CONNECT TO EXISTING COLD WATER PIPING AS INDICATED.
2. NEW COLD WATER PIPING DN TO CHECK METER C/W BACKFLOW PREVENTER AS SPECIFIED. REFER TO DETAILS.
3. NEW GAS HOT WATER TANK C/W RECIRCULATION PUMP AS SPECIFIED. PROVIDE ASSOCIATED CW, HW & HWR PIPING DN TO HOT WATER TANK AS INDICATED.
4. NEW 19ø CW AND 12ø HW PIPING DN TO DENTAL SINK S-1. PROVIDE 12ø SECONDARY CW PIPING CONNECTION BELOW SINK LEVEL, VALVE AND CAP. REFER TO DETAIL (TYP-8).
5. NEW 19ø CW AND 12ø HW PIPING DN TO STERILIZATION SINK S-2. PROVIDE 12ø SECONDARY CW PIPING CONNECTION BELOW SINK LEVEL, VALVE AND CAP. REFER TO DETAIL.
6. NEW 19ø CW/HW PIPING DN TO INSTRUMENT WASHER. INSTRUMENT WASHER TO BE PROVIDED BY OTHERS (TYP-2).
7. NEW 12ø CW/HW PIPING DN TO EYEWASH STATION. EYEWASH STATION TO BE PROVIDED BY OTHERS.
8. NEW 25ø CW PIPING DN THROUGH FLOOR. ROUTE COLD WATER PIPING BENEATH SLAB AS INDICATED.
9. NEW 12ø CW PIPING STUB OUT AT DENTAL CHAIR JUNCTION BOX. TERMINATE PIPING 50MM ABOVE FINISHED FLOOR AND CAP. DENTAL CHAIR TO BE PROVIDED BY OTHERS (TYP-7).
10. NEW 19ø CW/HW PIPING DN TO LABORATORY SINK S-3 AND EYEWASH STATION EW-1.
11. NEW 12ø CW/HW PIPNG DN TO KITCHEN SINK KS.
12. NEW 19ø CW/HW PIPNG DN TO CLOTHES WASHER. CLOTHES WASHER TO BE PROVIDED BY OTHERS AND INSTALLED BY THIS CONTRACTOR.
13. NEW 19ø CW/HW PIPNG TO SERVE LAVATORIES. CONNECT TO EXISTING CW/HW PIPING AS INDICATED.
14. NEW 12ø CW/HW PIPNG DN TO SERVE LAVATORY L-1.
15. NEW 19ø HOT WATER RETURN PIPING AS SPECIFIED. ROUTE PIPING IN CEILING SPACE AS INDICATED.
16. NEW 12ø CAPPED CW CONNECTION C/W BACKFLOW PREVENTER TO SERVE VACUUM PUMP. VACUUM PUMP TO BE PROVIDED BY OTHERS.
17. NEW 12ø CW/HW PIPING DN TO JANITOR SINK JS.
18. NEW 50ø CW PIPING IN COMPRESSOR ROOM CEILING SPACE. CONNECT TO EXISTING AS INDICATED.
19. NEW 25ø CW PIPING DN TO REMOTE WATER CONTROL VALVE. ROUTE CW PIPING AS INDICATED. REMOTE WATER CONTROL VALVE TO BE PROVIDED BY OTHERS.
20. NEW CEILING MOUNTED ELECTRIC HOT WATER TANK. PROVIDE ASSOCIATED CW/HW PIPING AS SPECIFIED.
21. NEW 12ø CW PIPING DN TO TRAP SEAL PRIMER.
22. NEW 25ø CW PIPING DN TO WATER CLOSET WC-1.
23. NEW 12ø CW PIPING C/W BFP DN TO HUMIDIFER. REFER TO DETAILS (TYP-2).
24. NEW 12ø CW/HW PIPING DN TO SINK S-4.

## GENERAL NOTES

1. THERMALLY INSULATE ALL PIPING AS PER THE "PIPING INSULATION SCHEDULE".
2. PROVIDE ISOLATING VALVES ON MAIN AND/OR BRANCH LINES AND FOR ALL EQUIPMENT AND FIXTURES SERVED WITH HOT AND COLD WATER LINES. ALL VALVES SHALL BE SUITABLE FOR THE OPERATING PRESSURE OF THE SYSTEM IN WHICH THEY ARE INSTALLED.
3. PROVIDE ADEQUATE ACCESS TO ALL SHUT-OFF VALVES AS PER ONTARIO BUILDING CODE.
4. INSTALL ALL PIPING MAXIMUM 12" ABOVE FINISHED CEILING.
5. ALL DENTAL EQUIPMENT SHALL BE INSTALLED AT THE END OF CONSTRUCTION AFTER SITE CLEANUP. AS PART OF THIS SCOPE OF WORK. CONTRACTOR SHALL COORDINATE AND SCHEDULE TIME TO COMPLETE FINAL MECHANICAL CONNECTIONS TO DENTAL EQUIPMENT.

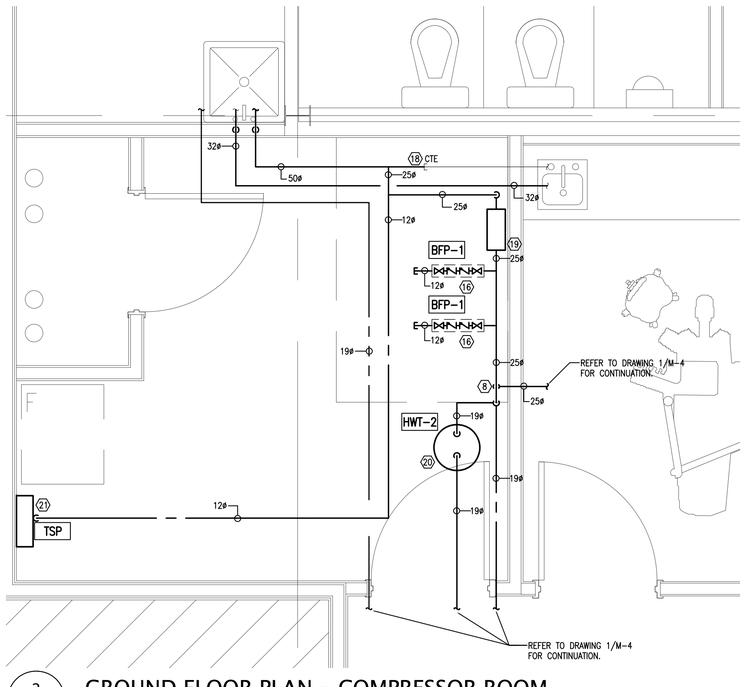


2 M-007 GROUND FLOOR PLAN – COMPRESSOR ROOM

1:25

ALL MEASUREMENTS ARE TO BE VERIFIED BY THE CONTRACTOR ON SITE AND ANY DISCREPANCIES ARE TO BE REPORTED BEFORE PROCEEDING WITH THE WORK. THE REGION OF DURHAM ASSUMES NO RESPONSIBILITY FOR THE ACCURACY OF THE LOCATION OF EXISTING SERVICES AS INDICATED ON THIS DRAWING. DO NOT SCALE DRAWINGS.

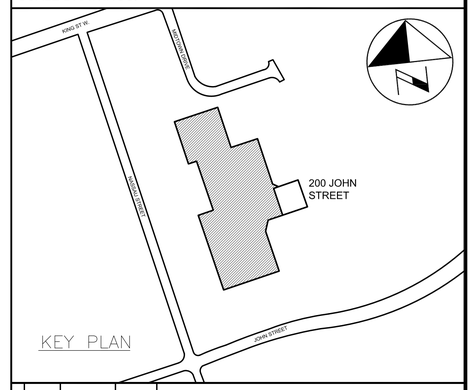


CONSULTANT REVISIONS

| NO. | DATE | NAME | REVISIONS |
|---|---|---|---|

PRIME CONSULTANT

BARRY BRYAN ASSOCIATES
Architects
Engineers
Project Managers
250 Water St.
Suite 201
Whitby, Ontario
L1N 0G5
Tel: (905) 666-5252
Fax: (905) 666-5256
e-mail: bba@bba-archeng.com

SUB-CONSULTANT

MADONNA ENGINEERING INC.
93 Woodstream Blvd Unit 10
Woodbridge, Ontario L4L 7Y7
Tel: (905) 265 1911 Fax: (905) 265 1998

LICENSED PROFESSIONAL ENGINEER
MAR 25 2021
A.A. MADONNA
PROVINCE OF ONTARIO

| | |
|---|---|
| DESIGN BY: JM | SCALE AS NOTED |
| DRAWN BY: JM | DATE: FEB 2021 |
| CHECKED BY: AM | CONSULTANT PROJECT NO. 20-0033 |
| APPROVED BY: | |

CONTRACT REVISIONS

| NO. | DATE | NAME | REVISIONS |
|---|---|---|---|
| 4 | MAR 25/21 | JM | ISSUED FOR PERMIT/TENDER |
| 3 | JAN 13/21 | JM | ISSUED FOR 90% CLIENT REVIEW |
| 2 | OCT 30/20 | JM | ISSUED FOR 90% CLIENT REVIEW |
| 1 | JUN 01/20 | JM | ISSUED FOR 60% CLIENT REVIEW |

DURHAM REGION

THE REGIONAL MUNICIPALITY OF DURHAM
WORKS DEPARTMENT
DESIGN, CONSTRUCTION & ASSET MANAGEMENT

# RELOCATION OF DENTAL CLINIC TO 200 JOHN ST., OSHAWA
# GROUND FLOOR PLAN
# PLUMBING – CONSTRUCTION

| PROPERTY NO. | FACILITY CODE | FACILITIES PROJECT NO. |
|---|---|---|
| N/A | LEA-O-07 | LEA-O-07-19-01 |
| CONTRACT NO. | DRAWING NO. | SHEET NO. |
| T-1032-2021 | M-007 | 025 |

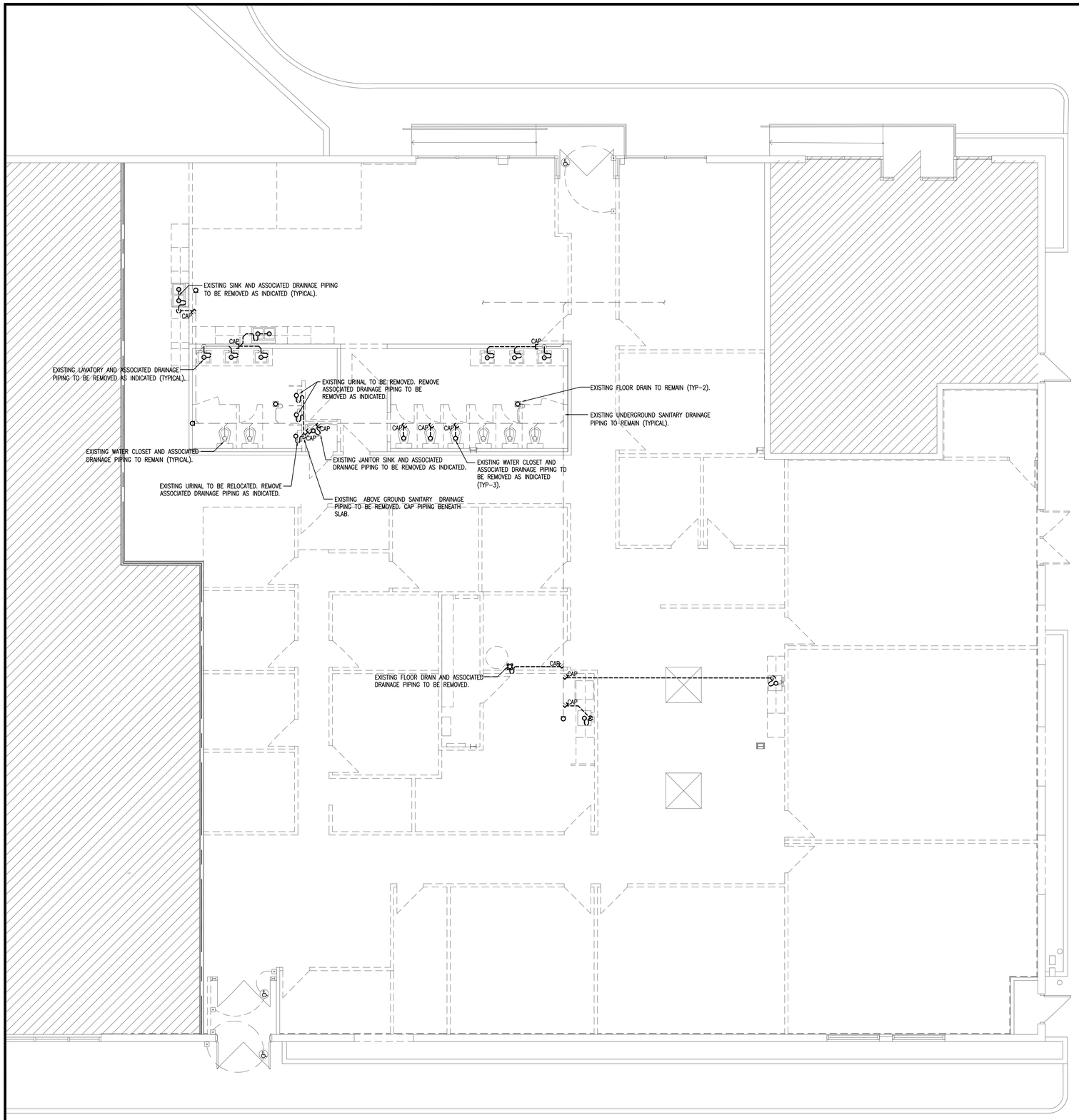


## GENERAL NOTES

1. CONTRACTOR TO VERIFY EXACT SIZE AND LOCATION OF ALL PLUMBING SYSTEMS PRIOR TO COMMENCING WORK. REPORT DISCREPANCIES TO ENGINEER.
2. ALL COMPONENTS BEING REMOVED ARE TO BE DISPOSED OF UNLESS OTHERWISE SPECIFIED.

ALL MEASUREMENTS ARE TO BE VERIFIED BY THE CONTRACTOR ON SITE AND ANY DISCREPANCIES ARE TO BE REPORTED BEFORE PROCEEDING WITH THE WORK. THE REGION OF DURHAM ASSUMES NO RESPONSIBILITY FOR THE ACCURACY OF THE LOCATION OF EXISTING SERVICES AS INDICATED ON THIS DRAWING. DO NOT SCALE DRAWINGS.

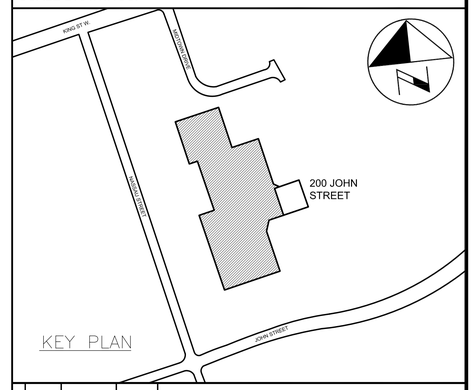


CONSULTANT REVISIONS

| NO. | DATE | NAME | REVISIONS |
|---|---|---|---|
| | | | |

PRIME CONSULTANT

BARRY BRYAN ASSOCIATES
Architects
Engineers
Project Managers
250 Water St.
Suite 201
Whitby, Ontario
L1N 0G5
Tel: (905) 666-5252
Fax: (905) 666-5256
e-mail: bba@bba-arcneng.com

SUB-CONSULTANT

MADONNA ENGINEERING INC.
93 Woodstream Blvd Unit 10
Woodbridge, Ontario L4L 7Y7
Tel: (905) 265 1911 Fax: (905) 265 1998

LICENSED PROFESSIONAL ENGINEER
MAR 25 2021
A.A. MADONNA
PROVINCE OF ONTARIO

| | |
|---|---|
| DESIGN BY: JM | SCALE 1:75 |
| DRAWN BY: JM | DATE: FEB 2021 |
| CHECKED BY: AM | CONSULTANT PROJECT NO. 20-0033 |
| APPROVED BY: | |

CONTRACT REVISIONS

| NO. | DATE | NAME | REVISIONS |
|---|---|---|---|
| 4 | MAR 25/21 | JM | ISSUED FOR PERMIT/TENDER |
| 3 | JAN 13/21 | JM | ISSUED FOR 90% CLIENT REVIEW |
| 2 | OCT 30/20 | JM | ISSUED FOR 90% CLIENT REVIEW |
| 1 | JUN 01/20 | JM | ISSUED FOR 60% CLIENT REVIEW |

DURHAM REGION

THE REGIONAL MUNICIPALITY OF DURHAM
WORKS DEPARTMENT
DESIGN, CONSTRUCTION & ASSET MANAGEMENT

# RELOCATION OF DENTAL CLINIC TO 200 JOHN ST., OSHAWA
# GROUND FLOOR PLAN
# DRAINAGE DEMOLITION

| PROPERTY NO. | FACILITY CODE | FACILITIES PROJECT NO. |
|---|---|---|
| N/A | LEA-O-07 | LEA-O-07-19-01 |
| CONTRACT NO. | DRAWING NO. | SHEET NO. |
| T-1032-2021 | M-008 | 026 |

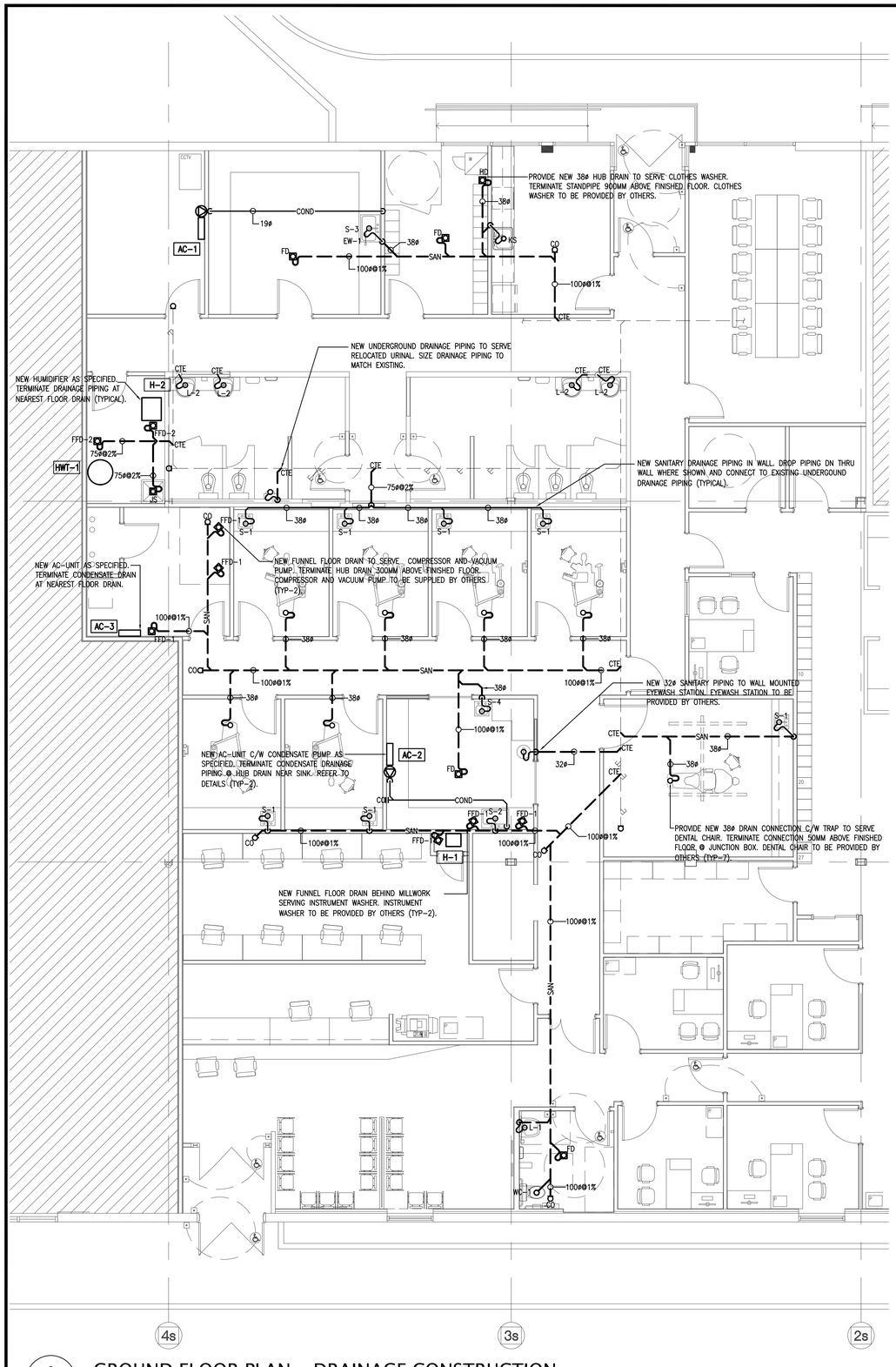


1 M-009 GROUND FLOOR PLAN - DRAINAGE CONSTRUCTION
1:75

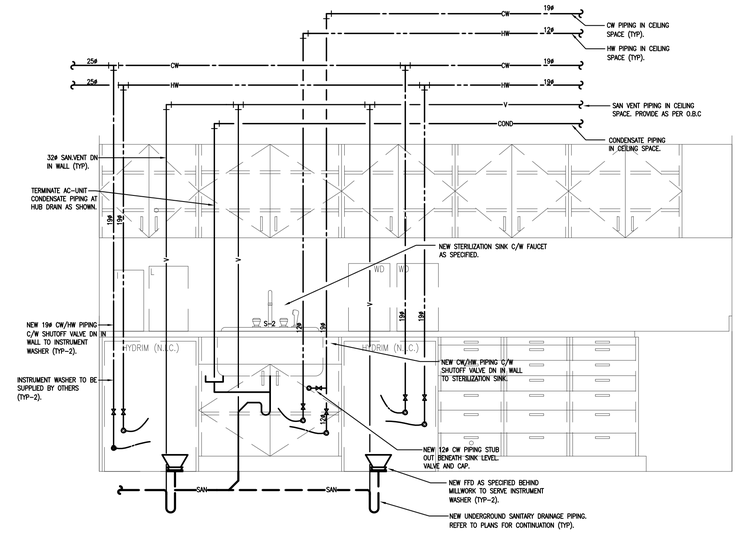


2 M-009 STERILIZATION ROOM SINK CONNECTION DETAIL
NTS

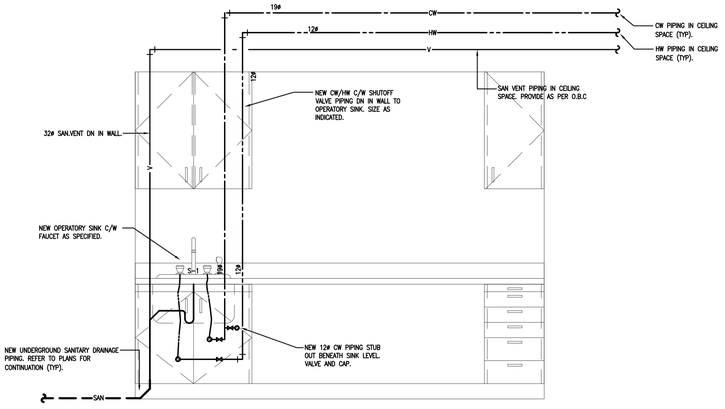


3 M-009 TYPICAL OPERATORY SINK CONNECTION DETAIL
NTS

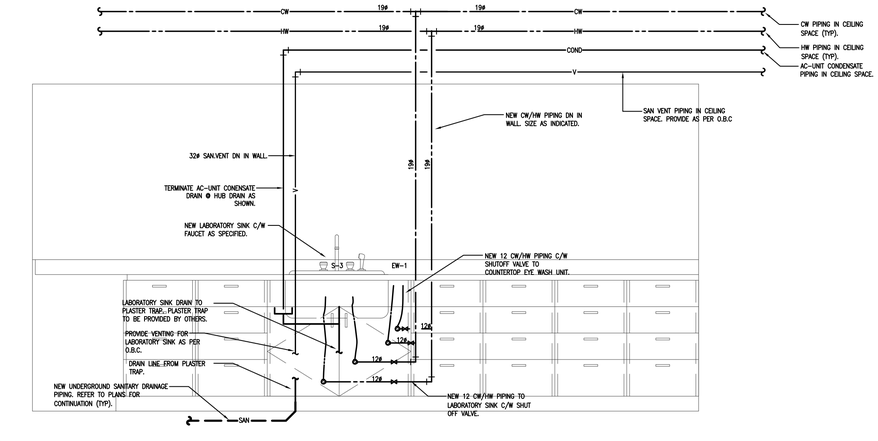


4 M-009 DENTURIST LABORATORY SINK CONNECTION DETAIL
NTS

ALL MEASUREMENTS ARE TO BE VERIFIED BY THE CONTRACTOR ON SITE AND ANY DISCREPANCIES ARE TO BE REPORTED BEFORE PROCEEDING WITH THE WORK. THE REGION OF DURHAM ASSUMES NO RESPONSIBILITY FOR THE ACCURACY OF THE LOCATION OF EXISTING SERVICES AS INDICATED ON THIS DRAWING. DO NOT SCALE DRAWINGS.

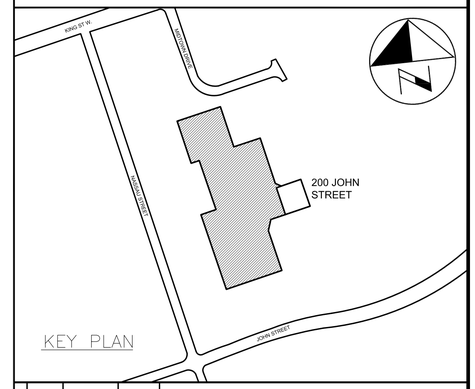


CONSULTANT REVISIONS

| NO. | DATE | NAME | REVISIONS |
|---|---|---|---|
| | | | |

PRIME CONSULTANT
BARRY BRYAN ASSOCIATES
Architects
Engineers
Project Managers
250 Water St.
Suite 201
Whitby, Ontario
L1N 0G5
Tel: (905) 666-5252
Fax: (905) 666-5256
e-mail: bba@bba-archeng.com

SUB-CONSULTANT
MADONNA ENGINEERING INC.
93 Woodstream Blvd Unit 10
Woodbridge, Ontario L4L 7Y7
Tel: (905) 265 1911 Fax: (905) 265 1998

LICENSED PROFESSIONAL ENGINEER
MAR 25 2021
A.A. MADONNA
PROVINCE OF ONTARIO

| | |
|---|---|
| DESIGN BY: JM | SCALE: AS NOTED |
| DRAWN BY: JM | DATE: FEB 2021 |
| CHECKED BY: AM | CONSULTANT PROJECT NO. 20-0033 |
| APPROVED BY: | |

CONTRACT REVISIONS

| NO. | DATE | NAME | REVISIONS |
|---|---|---|---|
| 4 | MAR 25/21 | JM | ISSUED FOR PERMIT/TENDER |
| 3 | JAN 13/21 | JM | ISSUED FOR 90% CLIENT REVIEW |
| 2 | OCT 30/20 | JM | ISSUED FOR 90% CLIENT REVIEW |
| 1 | JUN 01/20 | JM | ISSUED FOR 60% CLIENT REVIEW |

THE REGIONAL MUNICIPALITY OF DURHAM
WORKS DEPARTMENT
DESIGN, CONSTRUCTION & ASSET MANAGEMENT

# RELOCATION OF DENTAL CLINIC TO 200 JOHN ST., OSHAWA
# GROUND FLOOR PLAN - DRAINAGE CONSTRUCTION

| PROPERTY NO. | FACILITY CODE | FACILITIES PROJECT NO. |
|---|---|---|
| N/A | LEA-O-07 | LEA-O-07-19-01 |
| CONTRACT NO. | DRAWING NO. | SHEET NO. |
| T-1032-2021 | M-009 | 027 |

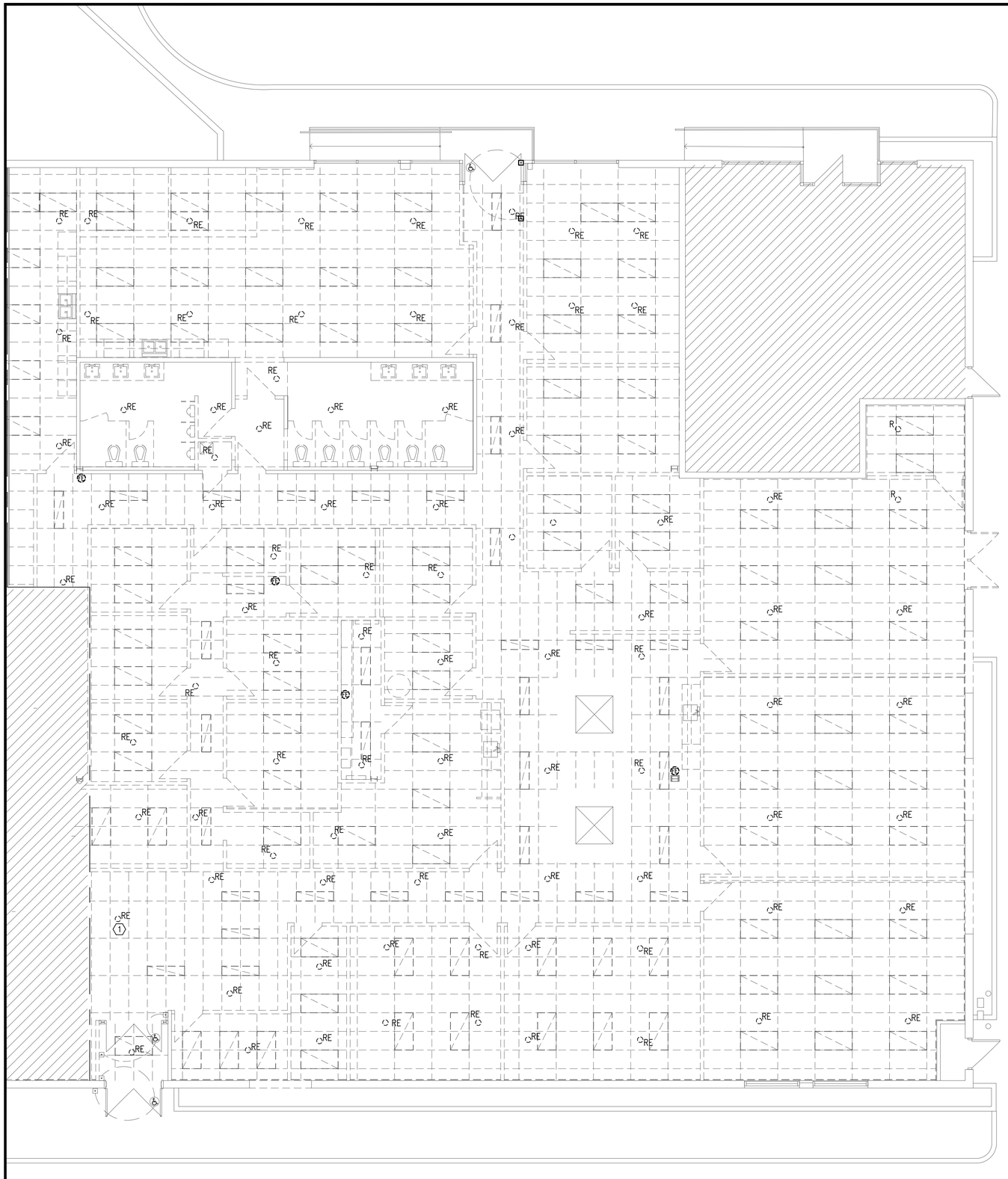


## FIRE PROTECTION DEMOLITION NOTES

1. EXISTING PENDENT SPRINKLER HEAD DENOTED 'RE' TO BE REMOVED (TYPICAL).
2. EXISTING FIRE EXTINGUISHER TO BE RELOCATED AS SHOWN ON M-9 (TYPICAL).

## FIRE PROTECTION GENERAL NOTES:

1. CONTRACTOR SHALL VERIFY ON SITE LOCATION OF EXISTING SPRINKLER SYSTEM PRIOR TO CONSTRUCTION. REPORT ANY DISCREPANCY TO ENGINEER.
2. ALL SPRINKLER WORK SHALL BE IN ACCORDANCE WITH NFPA-13 STANDARDS AND LOCAL BYLAWS.

ALL MEASUREMENTS ARE TO BE VERIFIED BY THE CONTRACTOR ON SITE AND ANY DISCREPANCIES ARE TO BE REPORTED BEFORE PROCEEDING WITH THE WORK. THE REGION OF DURHAM ASSUMES NO RESPONSIBILITY FOR THE ACCURACY OF THE LOCATION OF EXISTING SERVICES AS INDICATED ON THIS DRAWING. DO NOT SCALE DRAWINGS.

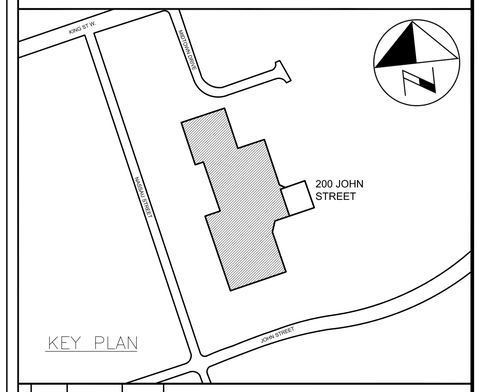


CONSULTANT REVISIONS

| NO. | DATE | NAME | REVISIONS |
|---|---|---|---|
| | | | |
| | | | |
| | | | |
| | | | |
| | | | |
| | | | |
| | | | |
| | | | |

PRIME CONSULTANT

BARRY BRYAN ASSOCIATES
Architects
Engineers
Project Managers
250 Water St,
Suite 201
Whitby, Ontario
L1N 0G5
Tel: (905) 666-5252
Fax: (905) 666-5256
e-mail: bba@bba-archeng.com

SUB-CONSULTANT

MADONNA ENGINEERING INC.
93 Woodstream Blvd Unit 10
Woodbridge, Ontario L4L 7Y7
Tel: (905) 265 1911 Fax: (905) 265 1998

LICENSED PROFESSIONAL ENGINEER
MAR 25 2021
A.A. MADONNA
PROVINCE OF ONTARIO

| | |
|---|---|
| DESIGN BY: JM | SCALE 1:75 |
| DRAWN BY: JM | DATE: FEB 2021 |
| CHECKED BY: AM | CONSULTANT PROJECT NO. 20-0033 |
| APPROVED BY: | |

CONTRACT REVISIONS

| NO. | DATE | NAME | REVISIONS |
|---|---|---|---|
| | | | |
| | | | |
| | | | |
| | | | |
| | | | |
| 3 | MAR 25/21 | JM | ISSUED FOR PERMIT/TENDER |
| 2 | JAN 13/21 | JM | ISSUED FOR 90% CLIENT REVIEW |
| 1 | OCT 30/20 | JM | ISSUED FOR 90% CLIENT REVIEW |

THE REGIONAL MUNICIPALITY OF DURHAM
WORKS DEPARTMENT
DESIGN, CONSTRUCTION & ASSET MANAGEMENT

# RELOCATION OF DENTAL CLINIC TO 200 JOHN ST., OSHAWA
# GROUND FLOOR PLAN – FIRE PROTECTION DEMOLITION

| PROPERTY NO. | FACILITY CODE | FACILITIES PROJECT NO. |
|---|---|---|
| N/A | LEA-O-07 | LEA-O-07-19-01 |
| CONTRACT NO. | DRAWING NO. | SHEET NO. |
| T-1032-2021 | M-010 | 028 |

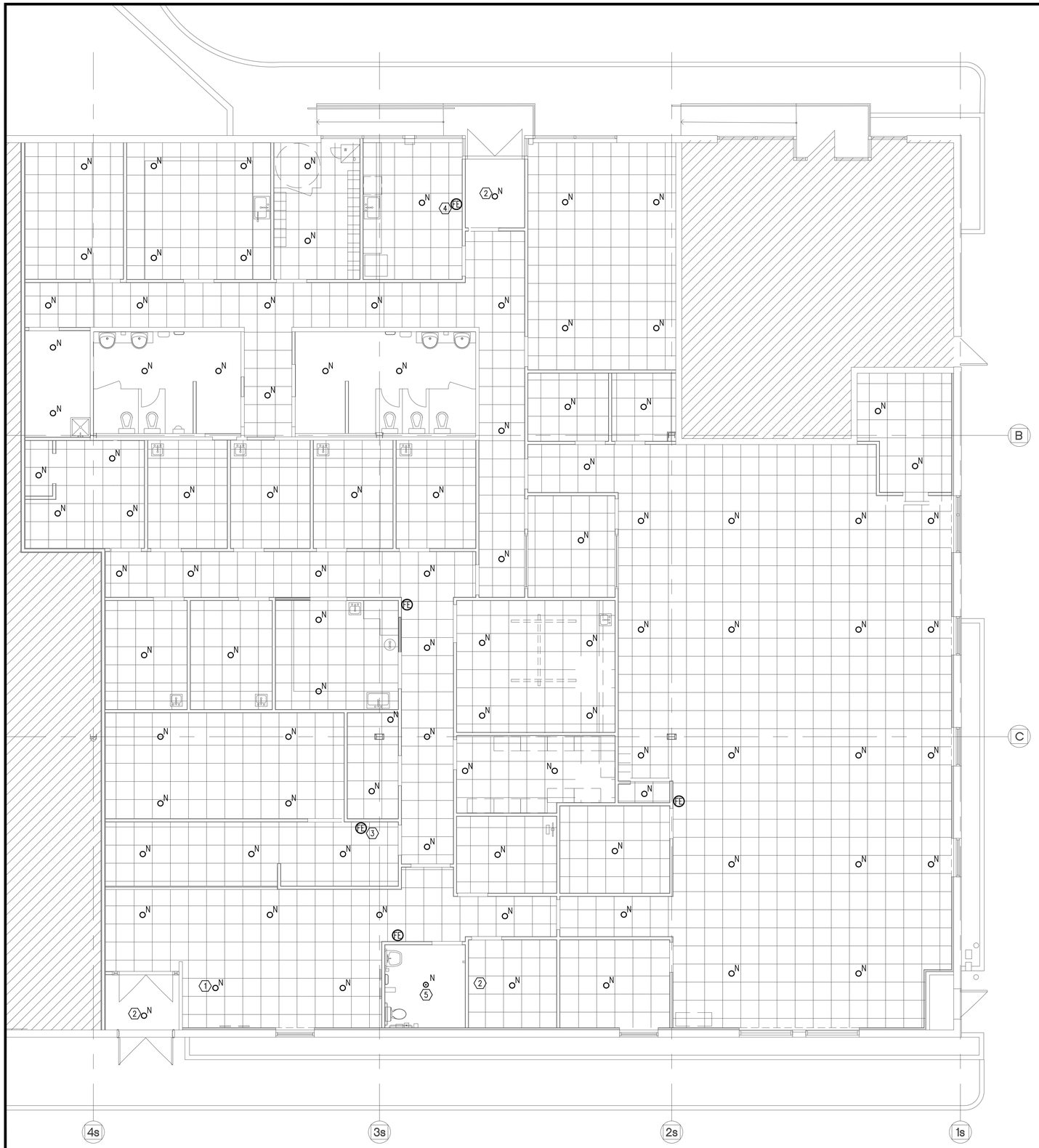


## FIRE PROTECTION NOTES

1. PROVIDE NEW PENDENT SPRINKLER HEAD (TYPICAL).
2. PROVIDE NEW DRY PENDENT SPRINKLER HEAD. REFER TO DETAILS.
3. NEW LOCATION OF EXISTING FIRE EXTINGUISHER (TYPICAL).
4. PROVIDE NEW FIRE EXTINGUISHER AS SPECIFIED.

## FIRE PROTECTION GENERAL NOTES:

1. ALL SPRINKLER WORK SHALL BE IN ACCORDANCE WITH NFPA-13 STANDARDS AND LOCAL BYLAWS.

ALL MEASUREMENTS ARE TO BE VERIFIED BY THE CONTRACTOR ON SITE AND ANY DISCREPANCIES ARE TO BE REPORTED BEFORE PROCEEDING WITH THE WORK. THE REGION OF DURHAM ASSUMES NO RESPONSIBILITY FOR THE ACCURACY OF THE LOCATION OF EXISTING SERVICES AS INDICATED ON THIS DRAWING. DO NOT SCALE DRAWINGS.

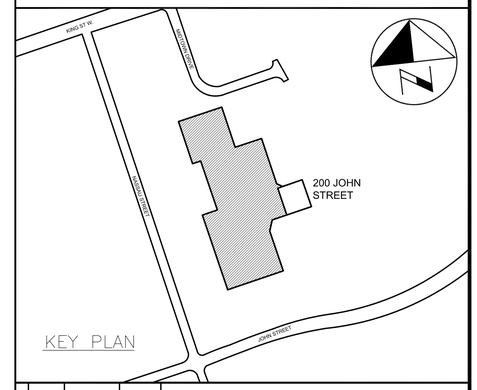


CONSULTANT REVISIONS

| NO. | DATE | NAME | REVISIONS |
|---|---|---|---|
| | | | |

PRIME CONSULTANT

BARRY BRYAN ASSOCIATES
Architects
Engineers
Project Managers
250 Water St,
Suite 201
Whitby, Ontario
L1N 0G5
Tel (905) 666-5252
Fax (905) 666-5256
e-mail bba@bba-archeng.com

SUB-CONSULTANT

MADONNA ENGINEERING INC.
93 Woodstream Blvd Unit 10
Woodbridge, Ontario L4L 7Y7
Tel: (905) 265 1911 Fax: (905) 265 1998

LICENSED PROFESSIONAL ENGINEER
MAR 25 2021
A.A. MADONNA
PROVINCE OF ONTARIO

| | |
|---|---|
| DESIGN BY: JM | SCALE 1:75 |
| DRAWN BY: JM | DATE: FEB 2021 |
| CHECKED BY: AM | CONSULTANT PROJECT NO. 20-0033 |
| APPROVED BY: | |

CONTRACT REVISIONS

| NO. | DATE | NAME | REVISIONS |
|---|---|---|---|
| 3 | MAR 25/21 | JM | ISSUED FOR PERMIT/TENDER |
| 2 | JAN 13/21 | JM | ISSUED FOR 90% CLIENT REVIEW |
| 1 | OCT 30/20 | JM | ISSUED FOR 90% CLIENT REVIEW |

THE REGIONAL MUNICIPALITY OF DURHAM
WORKS DEPARTMENT
DESIGN, CONSTRUCTION & ASSET MANAGEMENT

# RELOCATION OF DENTAL CLINIC TO 200 JOHN ST., OSHAWA
# GROUND FLOOR PLAN – FIRE PROTECTION CONSTRUCTION

| PROPERTY NO. | FACILITY CODE | FACILITIES PROJECT NO. |
|---|---|---|
| N/A | LEA-O-07 | LEA-O-07-19-01 |
| CONTRACT NO. | DRAWING NO. | SHEET NO. |
| T-1032-2021 | M-011 | 029 |

# PLUMBING FIXTURE SCHEDULE

| REF. | DESCRIPTION | COLD WATER (MM) | HOT WATER (MM) | DRAIN (MM) | VENT (MM) | SPECIFICATION |
|---|---|---|---|---|---|---|
| WC-1 | BARRIER-FREE FLUSH VALVE TYPE, FLOOR MOUNTED WATER CLOSET | 25ø | - | 75ø | 38ø | ZURN #Z5665-BWL1 VITREOUS CHINA ELONGATED BOWL, 425 MM (16 3/4 IN) IN HEIGHT, SIPHON JET ACTION, 54 MM (2 1/8 IN) COMPLETELY GLAZED TRAPWAY, BOLT CAPS, 38 MM (1 1/2 IN) TOP SPUD CONNECTION, 6.0 L (1.6 US GAL), 4.8 L (1.28 US GAL) AND AS LITTLE AS 4.2 L (1.1 US GAL) PER FLUSH, DEPENDING ON THE FLUSH VALVE SELECTED. ZURN #ZEMS6000AV-1-IS-HET EXPOSED ELECTRONIC FLUSH VALVE FOR WATER CLOSETS, TPE CHLORAMINE RESISTANT DUAL SEAL DIAPHRAGM WITH TRIPLE FILTER BY-PASS, POWERED BY HARDWIRED 6 VDC POWER CONVERTER, INFRARED CONVERGENCE TYPE PROXIMITY SENSOR, MOTORIZED ACTUATOR WITH OVERRIDE BUTTON, METAL CASING, CONTROL STOP WITH VANDAL RESISTANT STOP CAP, CAST WALL FLANGE, 38 MM (1 1/2 IN) VACUUM BREAKER TUBE WITH WATER SUPPLY 406 MM (16 IN) ABOVE CLOSET BOWL, POLISHED CHROME FINISH, 4.8 L (1.28 US GAL) PER FLUSH, (NOT INCLUDED) ELECTRICAL POWER CONVERTER 120 VAC/6 VDC, RECESSED INSTALLATION. ZURN #P6000-HW6 HARDWIRED POWER CONVERTER 120VAC/7.6 VDC, 2 AMP, CAPABLE OF SUPPLYING FOR 8 FAUCETS OR 8 FLUSH VALVES OR 8 FAUCETS/FLUSH VALVES COMBINED. ZURN #Z5956SS-EL-STS SOLID PLASTIC ELONGATED SEAT FOR SUPER-INTENSIVE USE, OPEN FRONT, COVERLESS, MOLDED BUMPER GUARD, STAINLESS STEEL CHECK HINGES AND FASTENERS. (WHITE). SANCERAM BACK REST CODE GRBR103 |
| L-1 | SINGLE BOWL BARRIER-FREE WALL-HUNG LAVATORY | 12ø | 12ø | 32ø | 32ø | ZURN #Z5321 581 X 514 MM (22 7/8 X 20 1/4") VITREOUS CHINA WALL HUNG LAVATORY FOR BARRIER-FREE APPLICATION, 581 X 514 MM ( 22 7/8 X 20 1/4 IN), BACKSPLASH, FRONT OVERFLOW, PRE-DRILLED FOR CONCEALED ARMS, DRILLED SINGLE HOLE. ZURN #Z6956XL-CWB-FS ARCHED STYLE HARDWIRED ELECTRONIC SENSOR FAUCET, 1.9 L/MIN. (0.5 USGPM) SPRAY OUTLET, SINGLE HOLE INSTALLATION, POLISHED CHROME FINISH, INFRARED CONVERGENCE TYPE PROXIMITY SENSOR, ON-DEMAND ACTIVATION WITH A 30 SECONDS RUN TIME, IN-LINE FILTER, PRE-MIXED WATER SUPPLY. INCLUDES 4 "AA" BATTERIES AS BATTERY BACK-UP TO FAUCET DURING POWER OUTAGES, BRAIDED STAINLESS STEEL HOSE SUPPLIES. SUPPLIED WITH 85 IN CABLE WIRE (CWB). ZURN #P6000-HW6 HARDWIRED POWER CONVERTER 120VAC/7.6 VDC, 2 AMP., CAPABLE OF SUPPLYING FOR 8 FAUCETS OR 8 FLUSH VALVES OR 8 FAUCETS/FLUSH VALVES COMBINED. ZURN #170-LF 127 MM X 120 MM (5 X 4") THERMOSTATIC POINT OF USE MIXING VALVE, 3/8" INLETS, 3/8" OUTLET, COMPRESSION CONNECTIONS, BRONZE BODY, LOCKED TEMPERATURE ADJUSTMENT CAP (VANDAL RESISTANT), COPPER ENCAPSULATED THERMOSTAT ASSEMBLY WITH, POLYMER THERMOPLASTIC SHUTTLE, STAINLESS STEEL SPRINGS, BUNA-N O'RINGS, INTEGRAL CHECK VALVES ON HOT AND COLD INLETS, COMPRESSION FITTINGS ON INLETS AND OUTLET. OS&B #37DWC 32 MM "DAISY" TYPE STRAINER OFFSET DRAIN ASSEMBLY, CAST BRASS BODY, 32 MM (1 1/4 IN), POLISHED CHROME FINISH. ZURN Z8700-8-PC-BD 32 MM (1 1/4") CAST BRASS ADJUSTABLE P-TRAP, 32 MM (1 1/4 IN) WITH DEEP WALL FLANGE AND CLEANOUT, CHROME PLATE FINISH. ZURN #Z1231-EZ CONCEALED WALL HUNG CARRIER, STEEL UPRIGHTS WITH WELDED FEET, CAST IRON ADJUSTABLE HEADERS, CONCEALED ARMS, ALIGNMENT TRUSS AND MOUNTING FASTENERS. ZURN #Z8946-3-NT ANTIMICROBIAL PROTECTORS, RESISTS THERMAL TRANSFERS FOR P-TRAP, OFFSET DRAIN ASSEMBLY, STOP AND SUPPLY. |
| L2 | SINGLE BOWL SEMI COUNTER TOP LAVATORY - GENERAL USE | 12ø | 12ø | 32ø | 32ø | AMERICAN STANDARD MEZZO #9960.403.020 BASIN, 3 HOLES, 4" (102 MM) CENTER, 559 MM X 546 MM X 210 MM (22" X 21-1/2" X 8-1/4") HIGH, VITREOUS CHINA, WHITE FINISH, SEMI-COUNTER, REAR OVERFLOW, FAUCET LEDGE, SPACE SAVING DESIGN, MOUNTING KIT. PROVIDE BASIN RIM SEALANT. AMERICAN STANDARD SERIN #2064101.002/2064.101P SINGLE HANDLE FAUCET, POLISHED CHROME FINISH, ESCUTCHEON PLATE, BRASS, WASHERLESS CERAMIC DISC VALVE CARTRIDGES, 4.5 L/MIN (1.2 GAL/MIN) AERATOR OUTLET, CAST BRASS SPOUT, 112 MM (4-7/16") PROJECTION REACH, METAL LEVER HANDLE, SPEED CONNECT CABLE OPERATED METAL POP-UP DRAIN ASSEMBLY WITH 32 MM (1-1/4") TAILPIECE. LAWLER #TMM-1070, BELOW DECK MECHANICAL WATER MIXING VALVE, BRONZE BODY, TEMPERATURE ADJUSTING DIAL, 10 MM (3/8") INLETS AND OUTLET COMPRESSION FITTINGS, HIGH TEMPERATURE THERMOSTATIC LIMIT STOP, SHUT-OFF WITH AUTOMATIC RESET WHEN TEMPERATURE EXCEEDS 120 °F (48.8 °C), INTEGRAL CHECKS, OFFER TEMPERATURE RANGE FROM FULL COLD THROUGH 46 °C (114.8 °F). PROVIDE TEE, ADAPTORS AND FLEX. COPPER TUBING TO SUIT INSTALLATION. PROVIDE TEMPERED WATER TO HOT SIDE OF FAUCET. MCGUIRE #LFH170BV FAUCET SUPPLIES, CHROME PLATED FINISH POLISHED BRASS, COMMERCIAL DUTY 1/4 TURN BALL VALVE ANGLE STOPS, 13 MM (1/2") I.D. INLET X 127 MM (5") HORIZONTAL EXTENSION TUBES, CONVERTIBLE 1/4 TURN/LOOSE KEY HANDLES, ESCUTCHEON AND FLEXIBLE COPPER RISERS. MCGUIRE #8872C P-TRAP, HEAVY CAST BRASS ADJUSTABLE BODY, WITH SLIP NUT, 32 MM (1-1/4") SIZE, SHALLOW WALL FLANGE AND SEAMLESS TUBULAR WALL BEND. |
| KS | SINGLE BOWL COUNTERMOUNT - KITCHEN SINK | 12ø | 12ø | 32ø | 32ø | SOLERA #S848TS (33" X 22" X 9 1/2" ) TRUE-GRANITE SINGLE BOWL SINK, 80% QUARTZ 20% ACRYLIC, SILVER FINISH,ALL NATURAL MATERIALS, RECYCLABLE, HEAT RESISTANT UP TO 550 DEGREES, NON-PORUS ANTIBACTERIAL, INSTALLATION KIT, 89 MM (3 1/2 IN) REAR CENTERED CRUMB CUP DRAIN ASSEMBLY, PRE-DRILLED AS SPECIFIED. PFISTER STELLEN 1.5 GPM FLOW RATE 3 FUNCTION PULL-DOWN SPRAYER 1 OR 3-HOLE INSTALLATION; DECK PLATE OR SINGLE HOLE MOUNTING OPTION ACCUDOCK™ SPRAYHEAD DOCKING PFOREVER SEAL CERAMIC DISC VALVE PFOREVER WARRANTY®. ZURN #Z8702-9BD 38 MM (1 1/2") CAST BRASS ADJUSTABLE P-TRAP, 38 MM (1 1/2 IN) WITH CLEANOUT, DEEP SEAL FLANGE, POLISHED CHROME FINISH. |
| S-1 | SINGLE BOWL COUNTERMOUNT - DENTAL SINK | 12ø | 12ø | 38ø | 32ø | SOLERA S3281T DROP-IN SINGLE BOWL, 304 SERIES STAINLESS STEEL, BRUSHED SATIN FINISH, 23 X 20 X 9 INCHES, FULLY INSULATED, OFF SET DRAIN, ONE PIECE CONSTRUCTION, THICK SOUND DAMPENER, INSTALLTION KIT INCLUDED. ZURN #Z6920XL-CWB-K-MJ-CP4 HARDWIRED ELECTRONIC SENSOR FAUCET, CAST BRASS BODY WITH GOOSENECK SPOUT 137 MM (5 3/8 IN), 3.8 L/MIN. (1.0 USGPM) LAMINAR FLOW SPOUT OUTLET, SINGLE HOLE INSTALLATION, POLISHED CHROME FINISH, INFRARED CONVERGENCE TYPE PROXIMITY SENSOR, ON-DEMAND ACTIVATION WITH A 30 SECONDS RUN TIME, IN-LINE FILTER, PRE-MIXED WATER SUPPLY. INCLUDES 4 "AA" BATTERIES AS BATTERY BACK-UP TO FAUCET DURING POWER OUTAGES. MULTI-JUNCTION BOX FOR 8 FAUCETS. SUPPLIED WITH 85 IN CABLE WIRE (CWB). 4 INCH COVER PLATE. ZURN #P6000-HW6 HARDWIRED POWER CONVERTER 120VAC/7.6 VDC, 2 AMP., CAPABLE OF SUPPLYING FOR 8 FAUCETS OR 8 FLUSH VALVES OR 8 FAUCETS/FLUSH VALVES COMBINED. ZURN #Z8702-9BD 38 MM (1 1/2") CAST BRASS ADJUSTABLE P-TRAP, 38 MM (1 1/2 IN) WITH CLEANOUT, DEEP SEAL FLANGE, POLISHED CHROME FINISH. |
| S-2 | SINGLE BOWL COUNTERMOUNT - STERILIZATION SINK | 12ø | 12ø | 38ø | 32ø | NOVANNI #1023AEJ-SH 762 X 508 X 254 MM (30" X 20" X 10" )STAINLESS STEEL SINGLE BOWL SINK, 762 X 508 X 254 MM (30 X 20 X 10 IN), TYPE 304, 18 GAUGE, SATIN FINISH, SOUND DEADENING PADS, RIM SEAL PRE-INTALLED, INSTALLATION KIT, 89 MM (3 1/2 IN) REAR CENTERED CRUMB CUP DRAIN ASSEMBLY, PRE-DRILLED AS SPECIFIED. ZURN# Z6920XL-CWB-K-MJ. HARDWIRED ELECTRONIC SENSOR FAUCET, CAST BRASS BODY WITH GOOSENECK SPOUT 137 MM (5 3/8 IN), 3.8 L/MIN. (1.0 USGPM) LAMINAR FLOW SPOUT OUTLET, SINGLE HOLE INSTALLATION, POLISHED CHROME FINISH, INFRARED CONVERGENCE TYPE PROXIMITY SENSOR, ON-DEMAND ACTIVATION WITH A 30 SECONDS RUN TIME, IN-LINE FILTER, PRE-MIXED WATER SUPPLY. INCLUDES 4 "AA" BATTERIES AS BATTERY BACK-UP TO FAUCET DURING POWER OUTAGES. MULTI-JUNCTION BOX FOR 8 FAUCETS. SUPPLIED WITH 85 IN CABLE WIRE (CWB). ZURN #P6000-HW6 HARDWIRED POWER CONVERTER 120VAC/7.6 VDC, 2 AMP.,CAPABLE OF SUPPLYING FOR 8 FAUCETS OR 8 FLUSH VALVES OR 8 FAUCETS/FLUSH VALVES COMBINED. POLYPROPYLENE P-TRAP FOR CORROSIVE PRODUCTS SUPPLIED BY OTHERS. |
| S-3 | SINGLE BOWL COUNTERMOUNT - LABORATORY SINK | 12ø | 12ø | 38ø | 32ø | CAN-AQUA #CA-EVPO262614-UN 660 X 660 X 356 MM (26 X 26 X 14") SINGLE BOWL UNDERMOUNT LABORATORY SINK, 10 MM (3/8 IN) THICK, 660 X 660 X 356 MM (26 X 26 X 14 IN), BLACK POLYPROPYLENE, 38 MM (1 1/2 IN) RIM, 38 MM (1 1/2 IN) INTEGRATED DRAIN ASSEMBLY SITUATED CENTER OF BOWL. ZURN #Z826U4-XL-6M HOT AND COLD LABORATORY FAUCET WITH RIGID 152 MM (6 IN) GOOSENECK SPOUT WITH VACUUM BREAKER, SERRATED NOZZLE, CAST BRASS BODY, POLISHED CHROME FINISH, 102 MM (4 IN) VANDAL-RESISTANT COLOR-CODED WRIST BLADE HANDLES, CERAMIC DISC CARTRIDGES, 8.3 L/MIN. (2.2 USGPM) PRESSURE COMPENSATING AERATOR, 10 MM (3/8 IN) STAINLESS STEEL BRAIDED HOSES, SINGLE HOLE INSTALLATION. |
| S-4 | SINGLE BOWL WALL MOUNT - DENTAL SINK | 12ø | 12ø | 38ø | 32ø | NOVANNI #8100-10 476 X 495 X 178 MM (18 3/4 X 19 1/2 X 7") WALL HUNG STAINLESS STEEL LAVATORY, TYPE 304, 16/18 GAUGE, 476 X 495 X 178 MM (18 3/4 X 19 1/2 X 7 IN), POLISHED SATIN FINISH, BACKSPLASH 76 MM (3 IN) IN HEIGHT, HANGAR PLATE, INTEGRAL 16 GAUGE LATERAL WALL SUPPORTS, DUPLEX TYPE DRAIN ASSEMBLY WITH GRATE, DRILLED SINGLE HOLE. ZURN #Z6920XL-CWB-K-MJ. HARDWIRED ELECTRONIC SENSOR FAUCET, CAST BRASS BODY WITH GOOSENECK SPOUT 137 MM (5 3/8 IN), 3.8 L/MIN. (1.0 USGPM) LAMINAR FLOW SPOUT OUTLET, SINGLE HOLE INSTALLATION, POLISHED CHROME FINISH, INFRARED CONVERGENCE TYPE PROXIMITY SENSOR, ON-DEMAND ACTIVATION WITH A 30 SECONDS RUN TIME, IN-LINE FILTER, PRE-MIXED WATER SUPPLY. INCLUDES 4 "AA" BATTERIES AS BATTERY BACK-UP TO FAUCET DURING POWER OUTAGES. MULTI-JUNCTION BOX FOR 8 FAUCETS. SUPPLIED WITH 85 IN CABLE WIRE (CWB). P6000-HW6 HARDWIRED POWER CONVERTER 120VAC/7.6 VDC, 2 AMP., CAPABLE OF SUPPLYING FOR 8 FAUCETS OR 8 FLUSH VALVES OR 8 FAUCETS/FLUSH VALVES COMBINED. ZURN #ZH8824XL-LKQ-PC/Z8952-58 (2) LAVATORY EXTRA HEAVY DUTY QUARTER TURN STOPS, LOW LEAD, DN 1/2 IN COMPR. X 3/8 IN COMPR., LOOSE KEY, FLANGES CHROME PLATED FINISH. ZW1070XL THERMOSTATIC MIXING VALVE FOR ONE OR MULTIPLE LAVATORIES OR SINKS, (SEE LIBRARY SPECIFICATION SHEET - MULTIPLE FAUCETS SECTION DIS.303). ZURN #Z8702-9BD 38 MM (1 1/2") CAST BRASS ADJUSTABLE P-TRAP, 38 MM (1 1/2 IN) WITH CLEANOUT, DEEP SEAL FLANGE, POLISHED CHROME FINISH. ZURN #Z1224 CONCEALED WALL HUNG CARRIER, EXTRA-HEAVY DUTY ADJUSTABLE PLATE, STEEL UPRIGHTS WITH WELDED FEET, MOUNTING FASTENER. |
| EW-1 | LEFT SIDED SINK-TOP MOUNTED EYEWASH | 12ø | 12ø | 38ø | 32ø | HAWS #7612LH LEFT SIDED SINK-TOP MOUNTED EYEWASH. ANTI-SURGE AXION MSR™ (MEDICALLY SUPERIOR RESPONSE), INVERTED LAMINAR FLOW EYEWASH STREAMS WITH ZERO VERTICAL VELOCITY, STAINLESS STEEL EYEWASH HEAD WITH IMPREGNATED ANTIMICROBIAL PROTECTION WITH WATER PRESSURE ACTIVATED YELLOW PLASTIC POP-OFF DUST COVER, INTEGRAL 14 L/MIN (3.7 USGPM) FLOW CONTROL, CHROME-PLATED BRASS STAY-OPEN BALL VALVE EQUIPPED WITH STAINLESS STEEL BALL AND STEM, SWING-AWAY FEATURE WHEN NOT IN USE, UNIVERSAL SIGN, AND 1/2" O. D. SLIP-JOINT INLET. OPERATING PRESSURE IS 30 - 90 PSI. HAWS 9201EW THERMOSTATIC MIXING VALVE THAT MIXES HOT AND COLD WATER TO SUPPLY TEMPERED WATER TO EMERGENCY EYEWASH FIXTURES REQUIRING FLOW UP TO 37.9 L/MIN. (10 GUSPM) AT A PRESSURE OF 207 KPA (30 PSI). UNIT EMPLOYS A PARAFFIN FILLED THERMOSTATIC MIXING ELEMENT. LOWEST INTERNAL PRESSURE DROP WHERE SUPPLY PRESSURE IS LOW, AND A HIGH COLD WATER BYPASS FLOW RATE OF 14.4 LPM (3.8 GPM). THE MODULAR BRASS DESIGN WITH A ONE PIECE CASTING USES INTERNAL CHECK STOPS, OVERSIZED VALVE SEATS, A SHUTTLE DESIGN THAT ELIMINATES VALVE BINDING, AND A FUNNEL DESIGN TO IMPROVE TEMPERATURE CONTROL WITH BETTER MIXING AT LOW FLOW RATES. LIME AND CALCIUM RESISTANT COMPONENTS ARE USED THROUGHOUT. FACTORY SET AT 29°C (85°F). MAXIMUM OPERATING PRESSURE: |
| JS | HIGH DENSITY COMPOSITE MOP BASIN | 19ø | 19ø | 75ø | 38ø | ZURN #Z1996-24 610 X 610 X 254 MM (24 X 24 X 10") MOLDED HIGH DENSITY COMPOSITE MOP BASIN, 610 X 610 X 254 MM (24 X 24 X 10 PO), 44 X 16 MM (1 3/4 X 5/8 IN) RIM, 76 MM (3 IN) PVC DRAIN BODY WITH STAINLESS STEEL DOME STRAINER/LINT BASKET, NPS 76 MM (3 IN) GASKETED OUTLET. ZURN #Z843M4-XL WALLMOUNT POLISHED CHROME-PLATED CAST BRASS 203MM (8 IN) SINK FAUCET, LOW LEAD, SHORT SWIVEL INLETS, 184 TO 222 MM (7 1/4 TO 8 3/4 IN) ADJUSTABLE CENTERS, INTEGRAL SERVICE STOPS, CERAMIC DISC CARTRIDGES, POLISHED CHROME FINISH, 102 MM (4 IN) VANDAL-RESISTANT COLOR-CODED METAL WRIST BLADE HANDLES, RIGID SPOUT WITH ATMOSPHERIC VACUUM BREAKER, WALL BRACE, PAIL HOOK AND HOSE THREADED OUTLET, OUTLET AT 232 MM (9 1/8 IN) FROM FINISHED WALL. ZURN #Z1996-BS24 STAINLESS STEEL BUMPER GUARD. QUANTITY TO BE DETERMINED. 610 MM (24 IN) IN LENGTH. ZURN #Z1996-HH 16 X 762 MM (5/8 X 30 PO) REINFORCED HOSE FOR INTENSIVE USE 16 X 762 MM (5/8 X 30 IN) IN LENGTH WITH BRASS COUPLING WITH HOSE BRACKET WITH RUBBER GRIP. Z1996-MH 610 X 76 MM (24 X 3") STAINLESS STEEL MOP HANGER, WITH 3 WALL HOOKS. Z1996-WG24 STAINLESS STEEL 2 PANELS WALL GUARD, 610 MM (24") FOR CORNER INSTALLATION, 20 GAUGE, SATIN FINISH, 305 MM (1/2") HIGH, CORNER MOLDING. |
| FD | FLOOR DRAIN | -- | -- | 100ø | 38ø | WATTS #FD-104-C-A5-1 FLOOR DRAIN - EPOXY COATED CAST IRON BODY, REVERSIBLE FLASHING CLAMP WITH PRIMARY AND SECONDARY WEEPHOLES, 4"Ø (102 MM) NO HUB OUTLET WATTS -A5-1 5" (127 MM) DIAMETER, NICKEL BRONZE, ADJUSTABLE ROUND STRAINER. |
| FFD-1 | FUNNEL FLOOR DRAIN | -- | -- | 100ø | 38ø | WATTS #FD-104-C-A5-1-G-1 FLOOR DRAIN - EPOXY COATED CAST IRON BODY, REVERSIBLE FLASHING CLAMP WITH PRIMARY AND SECONDARY WEEPHOLES, 4"Ø (102 MM) NO HUB OUTLET WATTS -A5-1-G-1 5" (127 MM) DIAMETER, NICKEL BRONZE, ADJUSTABLE ROUND STRAINER, 4" X 9" (102 MM X 229 MM) OVAL NICKEL BRONZE FUNNEL. |
| FFD-2 | FUNNEL FLOOR DRAIN | -- | -- | 75ø | 38ø | WATTS #FD-103-C-A5-1-G-1 FLOOR DRAIN - EPOXY COATED CAST IRON BODY, REVERSIBLE FLASHING CLAMP WITH PRIMARY AND SECONDARY WEEPHOLES, 3"Ø (76 MM) NO HUB OUTLET WATTS -A5-1-G-1 5" (127 MM) DIAMETER, NICKEL BRONZE, ADJUSTABLE ROUND STRAINER, 4" X 9" (102 MM X 229 MM) OVAL NICKEL BRONZE FUNNEL. |
| TSP | TRAP SEAL PRIMER | 12ø | -- | -- | -- | P.P.P. #PT-10 TRAP SEAL PRIMER SERVING TEN DRAINS ACTIVATED BY A 3/4" (19 MM) NORMALLY CLOSED SOLENOID VALVE, DESIGNED TO INTERFACE WITH LOW VOLTAGE ENERGY MANAGEMENT SYSTEMS CONTROL, 3/4" (19 MM) DIAMETER CONNECTION ANTI-SIPHON ATMOSPHERIC VACUUM BREAKER. |

# SPLIT-SYSTEM SCHEDULE

| REF. | MANUFAC. | MODEL | LOCATION | COOLING CAP. (KW) | HEATING CAP. (KW) | AIRFLOW (L/S) | VOLTAGE | MAX BREAKER / MOCP (A) | MCA | WEIGHT (KG) | REMARKS |
|---|---|---|---|---|---|---|---|---|---|---|---|
| AC-1 | MITSUBISHI | PKA-A36KA7 | REF PLANS | 10.55 | -- | 333-382-434 | 208/1/60 | 30.0 | 1.00 | 21.0 | REFER TO NOTES BELOW. |
| AC-2 | MITSUBISHI | PKFY-P24NKMU-E2-TH | REF PLANS | 7.03 | 7.90 | 269-434 | 208/1/60 | -- | -- | 21.0 | REFER TO NOTES BELOW. |
| AC-3 | MITSUBISHI | PKFY-P24NKMU-E2-TH | REF PLANS | 7.03 | 7.90 | 269-434 | 208/1/60 | -- | -- | 21.0 | REFER TO NOTES BELOW. |
| CU-1 | MITSUBISHI | PUY-A36NKA7 | REF PLANS | 10.55 | -- | -- | 208/1/60 | 30.0 | 25.0 | 96.0 | REFER TO NOTES BELOW. |
| CU-2 | MITSUBISHI | PUMY P48NKMU2 | REF PLANS | 14.06 | 15.82 | -- | 208/1/60 | 44 | 29.0 | 121.0 | REFER TO NOTES BELOW. |

NOTES:
1. ALL INDOOR UNITS SHALL BE EQUIPPED WITH MANUFACTURER SUPPLIED CONDENSATE PUMP & THERMOSTAT.
2. ALL OUTDOOR UNITS SHALL BE EQUIPPED WITH LOW AMBIENT COOLING & MANUFACTURER SUPPLIED STAND..
3. FIRST STARTUP AND COMMISSIONING SHALL BE COMPLETED BY MITSUBISHI TECHNICIAN.
4. PRODUCTS FROM ALTERNATIVE MANUFACTURERS WILL BE CONSIDERED, PROVIDED THEY ARE EQUIVALENT AND MEET THE INTENTION OF THE SPECIFICATION.

# EXHAUST FAN SCHEDULE

| REF. | LOCATION | FUNCTION | MANUFAC. | MODEL | CAP. (CFM) | ESP (INCH) | RPM | MOTOR | WEIGHT (KG) | V/PH/HZ | STARTER | REMARKS |
|---|---|---|---|---|---|---|---|---|---|---|---|---|
| EF-1 | UNIVERSAL W/R | WASHROOM EXHAUST | GREENHECK | CSP-A110 | 85 | 0.25 | 950 | 19.7 (W) | 7 | 120/1/60 | TIMER | -C/W DISCONNECT SWITCH, BACKDRAFT DAMPER, VIBRATION ISOLATION, FLEXIBLE DUCT CONNECTION AND TIMER. EXHAUST FAN SHALL RUN 24/7. |
| EF-2 | STERILIZATION ROOM | VENTILATION | GREENHECK | CUE-070 | 250 | 0.125 | 1300 | 1/60 (HP) | 13 | 120/1/60 | TIMER | -C/W ROOF CURB, DISCONNECT SWITCH, BACKDRAFT DAMPER, VIBRATION ISOLATION AND TIMER. |
| EF-3 | KITCHEN 127 | VENTILATION | GREENHECK | CSP-A290 | 270 | 0.25 | 1000 | 102 (W) | 10 | 120/1/60 | TIMER | -C/W DISCONNECT SWITCH, BACKDRAFT DAMPER, VIBRATION ISOLATION, FLEXIBLE DUCT CONNECTION AND TIMER. EXHAUST FAN SHALL RUN 24/7. |
| EF-4 | DENTURIST LAB 129 | VENTILATION | GREENHECK | CUE-080 | 360 | 0.25 | 1550 | 1/20 (HP) | 13 | 120/1/60 | TIMER | -C/W DISCONNECT SWITCH, BACKDRAFT DAMPER, VIBRATION ISOLATION, FLEXIBLE DUCT CONNECTION AND TIMER. EXHAUST FAN SHALL RUN 24/7. |
| EF-5 | COMPRESSOR ROOM | VENTILATION | GREENHECK | CSP-A110 | 85 | 0.25 | 950 | 19.7 (W) | 7 | 120/1/60 | TIMER | -C/W DISCONNECT SWITCH, BACKDRAFT DAMPER, VIBRATION ISOLATION, FLEXIBLE DUCT CONNECTION AND TIMER. EXHAUST FAN SHALL RUN 24/7. |
| EF-6 | EX WOMENS W/R | WASHROOM EXHAUST | GREENHECK | CSP-A190 | 150 | 0.375 | 1400 | 55 (W) | 7 | 120/1/60 | TIMER | -C/W DISCONNECT SWITCH, BACKDRAFT DAMPER, VIBRATION ISOLATION, FLEXIBLE DUCT CONNECTION AND TIMER. EXHAUST FAN SHALL RUN 24/7. |
| EF-7 | EX MENS W/R | WASHROOM EXHAUST | GREENHECK | CSP-A290 | 250 | 0.375 | 1350 | 161 (W) | 10 | 120/1/60 | TIMER | -C/W DISCONNECT SWITCH, BACKDRAFT DAMPER, VIBRATION ISOLATION, FLEXIBLE DUCT CONNECTION AND TIMER. EXHAUST FAN SHALL RUN 24/7. |

1. PRODUCTS FROM ALTERNATIVE MANUFACTURERS WILL BE CONSIDERED, PROVIDED THEY ARE EQUIVALENT AND MEET THE INTENTION OF THE SPECIFICATION.

# DUCTWORK INSULATION SCHEDULE

| APPLICATION | INSULATION TYPE | THICKNESS (MM) | REMARKS |
|---|---|---|---|
| SUPPLY AIR DUCTWORK IN UNCONDITIONED CEILING SPACE | D-1 | 38 | C/W VAPOUR BARRIER; SEE NOTES BELOW |
| RETURN AIR DUCTWORK IN UNCONDITIONED CEILING SPACE | D-1 | 25 | C/W VAPOUR BARRIER; SEE NOTES BELOW |
| EXHAUST DUCTWORK IN UNCONDITIONED CEILING SPACE | D-1 | 25 | C/W VAPOUR BARRIER; SEE NOTES BELOW |
| EXHAUST FAN DUCTWORK AS INDICATED ON PLANS. | D-2 | 25 | SEE NOTES BELOW |
| RTU SUPPLY & RETURN AIR DUCTWORK DOWN FROM RTU TO FIRST FITTING OR TRANSITION UNLESS SHOWN AS OTHERWISE ON PLANS | D-2 | 25 | SEE NOTES BELOW |

DUCTWORK INSULATION NOTES:

1. D-1 INSULATION SHALL BE OWENS CORNING RIGID VAPOUR SEAL DUCT INSULATION, JOHNS MANVILLE 814 SPIN-GLAS WITH FSK FACING, MANSON SPIN-GLAS RIGID INSULATING BOARD WITH REINFORCED FOIL FACING, OR KNAUF RIGID INSULATION BOARD WITH FSK FACING. DENSITY SHALL BE NOT LESS THAN 48KG/CUBIC METRE (3LBS./CU.FT.). THERMAL CONDUCTIVITY OF 0.033 W/M-°C (BTU-IN/(HR-CU.FT.-°F). IMPALE ON MECHANICALLY FASTENED PINS LOCATED AT NOT GREATER THAN 300MM (12") CENTRES. SECURE WITH SPEED WASHERS. BUTT JOINTS TIGHTLY TOGETHER AND SEAL WASHERS, BREAKS AND JOINTS WITH SELF-ADHERING 100MM (4") WIDE PLAIN ALUMINUM TAPE, OR ADHERE FOIL WITH CHILDERS CP82 OR BAKELITE 230-39 ADHESIVE.

   D-2 INSULATION SHALL BE JOHNS MANVILLE PERMACOTE LINACOUSTIC RECTANGULAR DUCT LINER MEETING ASTMC 1071 WITH AIR SURFACE COATED WITH ACRLIC COATING TREATED WITH EPA REGISTERED ANTI-MICROBIAL AGENT PROVEN TO RESIST MICROBIAL GROWTH AS DETERMINED BY ASTM G21 AND G22.

2. VAPOUR BARRIER SHALL BE FACTORY APPLIED ALL PURPOSE VAPOUR BARRIER JACKET.

# ROOFTOP AIR CONDITIONING/HEATING UNIT SCHEDULE

| REF. | MANUFAC. | NOM. TONS | MODEL | COOLING TOTAL (MBH) | COOLING ECONOM. | COOLING STAGES | COOLING ENT AIR TEMP (DB°F) | COOLING ENT AIR TEMP (WB°F) | COOLING LVG AIR TEMP (DB°F) | COOLING LVG AIR TEMP (WB°F) | HEATING INPUT (MBH) | HEATING OUTPUT (MBH) | HEATING STAGES | SUPPLY FAN CFM | SUPPLY FAN E.S.P. | SUPPLY FAN HP | SUPPLY FAN RPM | RETURN FAN CFM | RETURN FAN E.S.P. | RETURN FAN HP | MIN. FRESH AIR (CFM) | V/PH/HZ | MIN. CIRCUIT AMPS (A) | MOP (A) | WEIGHT (KG) | EER | MOUNTING ARRANGEMENT | REMARKS |
|---|---|---|---|---|---|---|---|---|---|---|---|---|---|---|---|---|---|---|---|---|---|---|---|---|---|---|---|---|
| RTU-1 | JOHNSON CONTROLS | 6.5 | ZJ078S18G2B2BCD2A2 | 75.0 | YES | 2 | 80.0 | 67.0 | 57.4 | 55.6 | 180 | 144 | FULLY MODULATING (33%-100%) | 2100 | 1.98" | 2.00 | 1074 | 2100 | 0.25" | 1.0 | 700 | 208/3/60 | 40.9 | 50 | 810 | 11.80 | DOWN DISCHARGE/RETURN | UNIT SHALL BE CSAZ317.2 COMPLIANT C/W VFD SUPPLY AND RETURN FAN, BAROMETRIC RELIEF DAMPER, STAINLESS STEEL HEAT EXCHANGER, ROOF CURB ADAPTOR, VAV CONTROLS, ECONOMIZER, DISCONNECT SWITCH, SUPPLY AIR TEMPERING CONTROLS AND PHASE MONITOR |
| RTU-2 | JOHNSON CONTROLS | 8.5 | ZJ102S18G2B2BCDA2 | 109.2 | YES | 2 | 80.0 | 67.0 | 59.8 | 57.5 | 180 | 144 | FULLY MODULATING (33%-100%) | 3600 | 1.5 | 3.00 | 1284 | 3600 | 0.2" | 1.50 | 1200 | 208/3/60 | 54.9 | 60 | 810 | 12.00 | DOWN DISCHARGE/RETURN | UNIT SHALL BE CSAZ317.2 COMPLIANT C/W VFD SUPPLY AND RETURN FAN, BAROMETRIC RELIEF DAMPER, STAINLESS STEEL HEAT EXCHANGER, ROOF CURB ADAPTOR, VAV CONTROLS, ECONOMIZER, DISCONNECT SWITCH, SUPPLY AIR TEMPERING CONTROLS AND PHASE MONITOR |
| RTU-3 | JOHNSON CONTROLS | 7.5 | ZYG08T2B3AB1B121A3 | 95.5 | YES | 2 | 80.0 | 67.0 | 58.4 | 56.9 | 220 | 176 | TWO STAGE | 3000 | 0.6 | 2.40 | 765 | - | - | - | 750 | 208/3/60 | 44.4 | 50 | 500 | 11.00 | DOWN DISCHARGE/RETURN | UNIT SHALL BE C/W VFD W/ INTELLISPEED, POWER EXHAUST, ECONOMIZER, BAROMETRIC RELIEF, STAINLESS STEEL HEAT EXCHANGER, ROOF CURB ADAPTER AND DISCONNECT SWITCH. |

NOTES:
1. UNIT TO COME WITH MANUFACTURER 1 YEAR PLANNED SERVICE AGREEMENT AND 1 YEAR LABOUR WARRANTY C/W NECESSARY SITE VISITS.
2. MANUFACTURER TO PROVIDE START-UP AND JOBSITE SPECIFIC CONDITIONS AS PER PLANS.
3. ALLOW 2 DAYS STARTUP, INTEGRATION AND PROGRAMMING TIME.
4. CONTACT: ISAAC MUI (ISAAC.MUI@JCI.COM) 416-938-9494.
5. PRODUCTS FROM ALTERNATIVE MANUFACTURERS WILL BE CONSIDERED, PROVIDED THEY ARE EQUIVALENT AND MEET THE INTENTION OF THE SPECIFICATION.

# VAV TERMINAL/VENTURI VALVE SCHEDULE

| REF. | LOCATION | FUNCTION | MANUFACTURER | MODEL NO. | UNIT SIZE | HEATER CAPACITY (KW) | HEATER VOLTAGE | MAXIMUM (CFM) | MINIMUM (CFM) | REMARKS |
|---|---|---|---|---|---|---|---|---|---|---|
| VAV-1 | CONSULT ROOM 1 | SUPPLY | EH PRICE | SDV | 4 | -- | -- | 130 | 85 | UNIT SHALL BE C/W ANTEC PACE CONTROLLER, DIRECT DIGITAL CONTROLS, SOUND ATTENUATION & THERMOSTAT. REFER TO NOTES. |
| VAV-2 | CONSULT ROOM 1 | RETURN | EH PRICE | SDE | 4 | -- | -- | 130 | 85 | UNIT SHALL BE C/W ANTEC PACE CONTROLLER, DIRECT DIGITAL CONTROLS & SOUND ATTENUATION. REFER TO NOTES. |
| VAV-3 | CONSULT ROOM 2 | SUPPLY | EH PRICE | SDV | 4 | -- | -- | 150 | 85 | UNIT SHALL BE C/W ANTEC PACE CONTROLLER, DIRECT DIGITAL CONTROLS, SOUND ATTENUATION & THERMOSTAT. REFER TO NOTES. |
| VAV-4 | CONSULT ROOM 2 | RETURN | EH PRICE | SDE | 4 | -- | -- | 150 | 85 | UNIT SHALL BE C/W ANTEC PACE CONTROLLER, DIRECT DIGITAL CONTROLS & SOUND ATTENUATION. REFER TO NOTES. |
| VAV-5 | PAN ROOM | SUPPLY | EH PRICE | SDV | 6 | -- | -- | 210 | 90 | UNIT SHALL BE C/W ANTEC PACE CONTROLLER, DIRECT DIGITAL CONTROLS, SOUND ATTENUATION & THERMOSTAT. REFER TO NOTES. |
| VAV-6 | PAN ROOM | RETURN | EH PRICE | SDE | 6 | -- | -- | 210 | 90 | UNIT SHALL BE C/W ANTEC PACE CONTROLLER, DIRECT DIGITAL CONTROLS & SOUND ATTENUATION. REFER TO NOTES. |
| VAV-7 | WAITING AREA 101 | SUPPLY | EH PRICE | SDV | 8 | -- | -- | 730 | 350 | UNIT SHALL BE C/W ANTEC PACE CONTROLLER, DIRECT DIGITAL CONTROLS, SOUND ATTENUATION & THERMOSTAT. REFER TO NOTES. |
| VAV-8 | WAITING AREA 101 | RETURN | EH PRICE | SDE | 10 | -- | -- | 800 | 420 | UNIT SHALL BE C/W ANTEC PACE CONTROLLER, DIRECT DIGITAL CONTROLS & SOUND ATTENUATION. REFER TO NOTES. |
| VAV-9 | RECEPTION/ADMIN | SUPPLY | EH PRICE | SDV | 8 | -- | -- | 805 | 300 | UNIT SHALL BE C/W ANTEC PACE CONTROLLER, DIRECT DIGITAL CONTROLS, SOUND ATTENUATION & THERMOSTAT. REFER TO NOTES. |
| VAV-10 | RECEPTION/ADMIN | RETURN | EH PRICE | SDE | 10 | -- | -- | 805 | 300 | UNIT SHALL BE C/W ANTEC PACE CONTROLLER, DIRECT DIGITAL CONTROLS & SOUND ATTENUATION. REFER TO NOTES. |
| VAV-11 | CORRIDOR C03/4 | SUPPLY | EH PRICE | SDV | 6 | 1.5 | 208/1/60 | 200 | 200 | UNIT SHALL BE C/W DIRECT DIGITAL CONTROLS, SCR ELECTRIC REHEAT, DUCT TEMPERATURE SENSOR SOUND ATTENUATION, & THERMOSTAT, REFER TO NOTES |
| VAV-12 | CORRIDOR C03/4 | RETURN | EH PRICE | SDE | 6 | -- | -- | 200 | 200 | UNIT SHALL BE C/W DIRECT DIGITAL CONTROLS & SOUND ATTENUATION. REFER TO NOTES. |
| VAV-13 | OPERATORY 1 | SUPPLY | ANTEC CONTROLS | VFX | 110 | 4.5 | 208/1/60 | 570 | 330 | UNIT SHALL BE C/W ANTEC PACE CONTROLLER, PROGRAMMABLE THERMOSTAT, OCCUPANCY SENSOR, DIRECT DIGITAL CONTROLS, DUCT TEMPERATURE SENSOR AND SCR ELECTRIC REHEAT COIL. REFER TO NOTES |
| VAV-14 | OPERATORY 1 | RETURN | ANTEC CONTROLS | VFX | 110 | -- | -- | 510 | 270 | UNIT SHALL BE C/W ANTEC PACE CONTROLLER, AND DIRECT DIGITAL CONTROLS, REFER TO NOTES |
| VAV-15, 17, 19, 21, 23 & 25 | OPERATORY 2, 3, 4, 5, 6 & 7 | SUPPLY | ANTEC CONTROLS | VFX | 108 | 1.5 | 208/1/60 | 175 | 110 | UNIT SHALL BE C/W ANTEC PACE CONTROLLER, PROGRAMMABLE THERMOSTAT, OCCUPANCY SENSOR, DIRECT DIGITAL CONTROLS, DUCT TEMPERATURE SENSOR AND SCR ELECTRIC REHEAT COIL. REFER TO NOTES |
| VAV-16, 18, 20, 22, 24 & 26 | OPERATORY 2, 3, 4, 5, 6 & 7 | RETURN | ANTEC CONTROLS | VFX | 108 | -- | -- | 155 | 90 | UNIT SHALL BE C/W ANTEC PACE CONTROLLER, AND DIRECT DIGITAL CONTROLS, REFER TO NOTES. |
| VAV-27 | MEETING ROOM 126 | SUPPLY | EH PRICE | SDV | 8 | -- | -- | 700 | 250 | UNIT SHALL BE C/W ANTEC PACE CONTROLLER, DIRECT DIGITAL CONTROLS, SOUND ATTENUATION & THERMOSTAT. REFER TO NOTES. |
| VAV-28 | MEETING ROOM 126 | RETURN | EH PRICE | SDE | 8 | -- | -- | 700 | 250 | UNIT SHALL BE C/W ANTEC PACE CONTROLLER, DIRECT DIGITAL CONTROLS AND SOUND ATTENUATION. REFER TO NOTES. |
| VAV-29 | KITCHEN 127 | SUPPLY | EH PRICE | SDV | 6 | -- | -- | 240 | 100 | UNIT SHALL BE C/W DIRECT DIGITAL CONTROLS, SOUND ATTENUATION & THERMOSTAT. REFER TO NOTES. |
| VAV-30 | LOCKERS 128 | SUPPLY | EH PRICE | SDV | 6 | 1.5 | 208/1/60 | 210 | 110 | UNIT SHALL BE C/W ANTEC PACE CONTROLLER, DIRECT DIGITAL CONTROLS, SCR ELECTRIC REHEAT, SOUND ATTENUATION & THERMOSTAT. REFER TO NOTES. |
| VAV-31 | LOCKERS 128 | RETURN | EH PRICE | SDE | 6 | -- | -- | 240 | 140 | UNIT SHALL BE C/W ANTEC PACE CONTROLLER, DIRECT DIGITAL CONTROLS AND SOUND ATTENUATION. REFER TO NOTES. |
| VAV-32 | DENTURIST LAB 129 | SUPPLY | EH PRICE | SDV | 6 | 2.0 | 208/1/60 | 330 | 150 | UNIT SHALL BE C/W DIRECT DIGITAL CONTROLS, SCR ELECTRIC REHEAT, SOUND ATTENUATION & THERMOSTAT. REFER TO NOTES. |
| VAV-33 & 35 | CORRIDOR C06/07 | SUPPLY | EH PRICE | SDV | 4 | 1.0 | 208/1/60 | 135 | 135 | UNIT SHALL BE C/W DIRECT DIGITAL CONTROLS, SCR ELECTRIC REHEAT, DUCT TEMPERATURE SENSOR, SOUND ATTENUATION & THERMOSTAT. REFER NOTES. |
| VAV-34 & 36 | CORRIDOR C06/07 | RETURN | EH PRICE | SDE | 4 | -- | -- | 135 | 135 | UNIT SHALL BE C/W DIRECT DIGITAL CONTROLS & SOUND ATTENUATION. REFER TO NOTES. |

NOTES
1. THERMOSTAT FOR OPERATORY 1-7 SHALL BE ANTEC ENVIRONMENT SENSOR. SENSOR SHALL HAVE TEMPERATURE DISPLAY, SETPOINT ADJUSTMENT AND RELATIVE HUMIDITY SENSOR. REFER TO CONTROL SEQUENCES.
2. PRESSURE MONITOR FOR OPERATORY 1-7 SHALL BE ANTEC PMT TOUCH SCREEN PRESSURE MONITOR. REFER TO CONTROL SEQUENCES.
3. DUCT TEMPERATURE SENSOR FOR OPERATORY 1-7 SHALL BE ANTEC DUCT ENVIRONMENT SENSOR. REFER TO CONTROL SEQUENCES.
4. CONTRACTOR SHALL BALANCE ALL SUPPLY AND RETURN VALVES/VAVS AFTER ALL WALLS AND CEILINGS HAVE BEEN FULLY CONSTRUCTED.
5. CONTRACTOR SHALL BALANCE ALL SUPPLY AND RETURN VALVES/VAVS TO THE AIR FLOW VALUES SHOWN ON THIS TABLE.
6. WHERE ROOMS ARE REQUIRED TO BE 'POSITIVELY' OR ' NEGATIVELY' PRESSURIZED AS PER THE 'ROOM PRESSURIZATION SCHEDULE'. THE RETURN VALVE/VAV SHALL TRACK THE SUPPLY VALVE/VAV IN ACCORDANCE WITH THE CFM OFFSETS OUTLINED IN THIS TABLE.
7. ANTEC PACE CONTROLLER SHALL BE CONFIGURED FOR FLOW OFFSET CONTROL. REFER TO CONTROL SEQUENCES FOR DETAILED OPERATION OF SUPPLY AND RETURN VALVES/VAVS.
8. CONTACT: DRAZENA TRAVORIC (DTRAVORIC@EHPRICESALES.COM) 905-660-0066 EXT 253
9. EQUIVALENT ALTERNATIVE MANUFACTURERS WILL BE CONSIDERED FOR VALVES, TERMINAL UNITS AND AIRFLOW CONTROL SYSTEM. REFER TO SPECIFICATIONS.

# HUMIDIFIER SCHEDULE

| UNIT REF. | LOCATION | MANUFA. | MODEL | NOMINAL STEAM CAPACITY LB/HR) | SUPPLY WATER CONNECTION SIZE | STEAM CONNECTION SIZE (MM) | NATURAL GAS INPUT (KW) | THERMAL EFFICIENCY | GAS CONNECTION (MM) | FLUE VENT/INTAKE (MM) | ELECTRICAL CHARACTERISTICS V/PH/HZ | ELECTRICAL CHARACTERISTICS RATED INPUT (KW) | ELECTRICAL CHARACTERISTICS RATED CURRENT (A) | MOUNTING ARRANGMENT | WEIGHT (KG) | REMARKS |
|---|---|---|---|---|---|---|---|---|---|---|---|---|---|---|---|---|
| H-1 | CUSTODIAL | NORTEC | GS-50 | 50.0 | 12ø | 44.45 | 18.17 | 90% | 1/2" NPT | 50ø | 120/1/60 | -- | 2.00 | FLOOR MOUNT | 83.5 | - REFER TO NOTES BELOW |

NOTES:
1. HUMIDIFIER H-1 SHALL BE C/W GS-50 COMPACT STAND FOR FLOOR MOUNT APPLICATION.
3. HUMIDIFIERS SHALL BE C/W QTY. NORTEC MINI SAM-E SHORT ABSORPTION STEAM DISTRIBUTION MANIFOLD (SDM-1 & SDM-2) C/W INSULATED TUBES, HEADER, MOUNTING FRAME AND INLET KIT.
4. HUMIDIFIERS SHALL BE C/W INTEGRATED CONTROLS TO ALLOW FULL CONFIGURATION AND CONTROL OF UNIT.
5. PROVIDE ALL NECESSARY ACCESSORIES FOR A COMPLETE INSTALLATION INCLUDING QTY. DUCT MOUNTED AIR PROVING SWITCH, HIGH LIMIT SWITCH AND OUTDOOR SENSOR.
6. FOR HUMIDIFIER H-2 PROVIDE NORTEC SELF-ACTUATED DRAIN WATER COOLER PART 1710010.
7. PROVIDE HARTELL MODEL A5X-115 CONDENSATE PUMP 1/2HP, 115V/1/60, 6.0AMPS. INTERLOCK PUMP OPERATION WITH HUMIDIFIER, HIGH WATER LEVEL ALARM SHALL SHUTDOWN HUMIDIFIER OPERATION.
8. HUMIDIFIER SHALL BE INSTALLED AS PER MANUFACTURER'S INSTALLATION INSTRUCTIONS AND RECOMMENDED CLEARANCES. START-UP AND PROJECT INSPECTION BY QUALIFIED FACTORY TRAINED REPRESENTATIVE.
9. PRODUCTS FROM ALTERNATIVE MANUFACTURERS WILL BE CONSIDERED, PROVIDED THEY ARE EQUIVALENT AND MEET THE INTENTION OF THE SPECIFICATION.

# AIR FILTER SCHEDULE

| REF. | MANUFACTURER | MODEL | TYPE | HOUSING DIMENSIONS (W" X H" X D") | FILTER (W"X H" X D") | FILTER QUANTITY | EFFICIENCY | AIRFLOW (CFM) | INITIAL APD (IN.W.C.) | FINAL APD (IN.W.C.) | REMARKS |
|---|---|---|---|---|---|---|---|---|---|---|---|
| FLT-1 | AAF FLANDERS | SP-4-10H10W-SP2 -GM3-LL | MERV-14 | 24" X 27" X 12" | VARICELL 2+HC NH MERV-14 FILTER (24" X 24" X 4") | 2 | 95% @ 0.3 MICRON | 1050 (EACH) | 0.2 | 1.5 | - REFER TO NOTES BELOW. |
| FLT-2 | AAF FLANDERS | SP-4-10H20W-SP2 -GM3-LL | MERV-14 | 48" X 27" X 12" | VARICELL 2+HC NH MERV-14 FILTER (24" X 24" X 4") | 2 | 95% @ 0.3 MICRON | 1800 (EACH) | 0.27 | 1.5 | - REFER TO NOTES BELOW. |

NOTES:

1. FILTER TO BE C/W FACTORY INSTALLED STATIC TAPS AND DWYER MAGNEHELIC GAUGE (0-2"WG). REFER TO SPECIFICATIONS.
2. EQUIVALENT ALTERNATIVE MANUFACTURERS WILL BE CONSIDERED.

# ELECTRIC HEATER SCHEDULE

| REF. | MANUFAC | MODEL | LOCATION | HEAT OUTPUT (KW) | V/PH/HZ | REMARKS |
|---|---|---|---|---|---|---|
| FFH-1 | STELPRO | ADRI0281T | VESTIBULE V01 | 2.0 | 208/1/60 | FOR RECESSED INSTALLATION, COLOUR WHITE C/W BUILT-IN THERMOSTAT & EXTERNAL 24V TRANSFORMER. |
| FFH-2 | STELPRO | ADRI0281T | VESTIBULE V02 | 2.0 | 208/1/60 | FOR RECESSED INSTALLATION, COLOUR WHITE C/W BUILT-IN THERMOSTAT & EXTERNAL 24V TRANSFORMER. |
| BBH-1, 2 | OUELLET | OFM01258 | WAITING AREA 101 | 1.25 | 208/1/60 | FOR SURFACE MOUNT INSTALLATION. PROVIDE CONTROL WIRING TO SUIT. REFER TO CONTROL SEQUENCES FOR HEATER OPERATION. |
| BBH-3 | OUELLET | OFM1258 | WAITING AREA 101 | 1.25 | 208/1/60 | FOR SURFACE MOUNT INSTALLATION. PROVIDE CONTROL WIRING TO SUIT. REFER TO CONTROL SEQUENCES FOR HEATER OPERATION. |
| BBH-4 | OUELLET | OFM0508 | UNIVERSAL W/R 105 | 0.5 | 208/1/60 | FOR SURFACE MOUNT INSTALLATION C/W BUILT-IN THERMOSTAT |
| BBH-5 | OUELLET | OFM1008 | CONSULT ROOM 2 | 1.0 | 208/1/60 | FOR SURFACE MOUNT INSTALLATION. PROVIDE CONTROL WIRING TO SUIT. REFER TO CONTROL SEQUENCES FOR HEATER OPERATION. |
| BBH-6 | OUELLET | OFM1008 | OFFICE 108 | 1.0 | 208/1/60 | FOR SURFACE MOUNT INSTALLATION. C/W BUILT-IN THERMOSTAT |
| BBH 7, 8 | OUELLET | OFM1508 | MEETING ROOM 126 | 1.5 | 208/1/60 | FOR SURFACE MOUNT INSTALLATION. PROVIDE CONTROL WIRING TO SUIT. REFER TO CONTROL SEQUENCES FOR HEATER OPERATION. |
| BBH-9 | OUELLET | OFM2008 | KITCHEN 127 | 2.0 | 208/1/60 | FOR SURFACE MOUNT INSTALLATION. PROVIDE CONTROL WIRING TO SUIT. REFER TO CONTROL SEQUENCES FOR HEATER OPERATION. |
| BBH-10 | OUELLET | OFM0508 | KITCHEN 127 | 1.0 | 208/1/60 | FOR SURFACE MOUNT INSTALLATION. C/W BUILT-IN THERMOSTAT |

1. PRODUCTS FROM ALTERNATIVE MANUFACTURERS WILL BE CONSIDERED, PROVIDED THEY ARE EQUIVALENT AND MEET THE INTENTION OF THE SPECIFICATION.

# PIPING INSULATION SCHEDULE

| APPLICATION | NOMINAL PIPE SIZE (MM) 25 AND LESS | 32 TO 50 | 63 TO 100 | REMARKS |
|---|---|---|---|---|
| DCW | 12 | 12 | - | TYPE P-1 C/W VAPOUR BARRIER; SEE NOTES BELOW |
| DHW & DHW-RECIRC. | 25 | 25 | - | TYPE P-1; SEE NOTES BELOW |
| HORIZONTAL COND PIPING | 12 | 12 | - | TYPE P-1 C/W VAPOUR BARRIER; SEE NOTES BELOW |
| REFRIG. PIPING (40°F AND ABOVE) | 12 | 25 | - | TYPE P-2 C/W VAPOUR BARRIER; SEE NOTES BELOW |
| REFRIG. PIPING (BELOW 40°F) | 12 | 25 | - | TYPE P-2 C/W VAPOUR BARRIER; SEE NOTES BELOW |
| STEAM SUPPLY & CONDENSATE PIPING (HUMIDIFIER) | 25 | 25 | - | TYPE P-1 C/W VAPOUR BARRIER; SEE NOTES BELOW |

PIPING INSULATION NOTES:

1. P-1 INSULATION SHALL BE SECTIONAL MOLDED GLASS FIBER, MINIMUM 48 KG PER CUBIC METER (3.0 LB PER CUBIC FOOT DENSITY), WITH A THERMAL CONDUCTIVITY NOT GREATER THAN 0.035 W/M-°C (0.24 BTU-IN./SQ.FT./°F/HR.) AT MEAN TEMPERATURE RATING OF 52.8 °C (125°F) AND A WHITE FACTORY-APPLIED FLAME-RETARDANT VAPOR BARRIER JACKET OF 0.001" ALUMINUM FOIL LAMINATED TO KRAFT REINFORCED WITH GLASS FIBERS, OR ALL SERVICE JACKET.
2. P-2 INSULATION: INSULATE ALL REFRIGERATION PIPING WITH A FLEXIBLE, CLOSED CELL ELASTOMERIC PIPE INSULATION, AP ARMAFLEX. ADHESIVE SHALL BE ARMAFLEX 520. FLAME SPREAD INDEX OF LESS THAN 25 AND A SMOKE DEVELOPMENT INDEX OF LESS THAN 50. IN ADDITION, THE PRODUCT, WHEN TESTED, SHALL NOT MELT OR DRIP FLAMING PARTICLES, AND THE FLAME SHALL NOT BE PROGRESSIVE.
3. VAPOUR BARRIER SHALL BE FACTORY APPLIED ALL PURPOSE VAPOUR BARRIER JACKET.
4. USE PERFORMED INSULATION ON FITTING AND ELBOWS.
5. RECOVER INSULATION AND INSULATION FINISHES OUTSIDE THE BUILDING OR EXPOSED TO THE WEATHER WITH ALUMINUM JACKET WITH ALUMINUM FITTINGS. BAND ALL TRANSVERSE SEAMS WITH WATERPROOF MASTIC TAPE AND CAULK ALL LONGITUDINAL SEAMS WITH SILICONE CAULKING. SEAL THE ENTIRE COVERING TO ACHIEVE A WATERTIGHT ASSEMBLY.

# DIFFUSER AND GRILLE SCHEDULE

| REF. | MODEL | FINISH | REMARKS |
|---|---|---|---|
| A | EH RICE MODEL SCD SQUARE CONE DIFFUSER | B-12 | 600X600 SQUARE CEILING DIFFUSER FOR DRYWALL OR T-BAR LAY-IN. CEILING TYPE, REFER TO PLANS FOR NECK SIZE AND BALANCING. |
| B | EH PRICE MODEL 80 RETURN GRILLE | B-12 | EGG CRATE RETURN GRILLE FOR DUCTED & NON-DUCTED APPLICATION, C/W OPPOSED-BLADE DAMPER WHERE AIR BALANCING IS INDICATED. PROVIDE DUCT CONNECTION FOR DUCTED RETURN APPLICATION. REFER TO PLANS FOR GRILLE SIZE AND BALANCING. RETURN GRILLE FOR T-BAR AND DRYWALL CEILING APPLICATION. |
| C | EH PRICE MODEL LFD LAMINAR FLOW DIFFUSER | B-12 | LAMINAR FLOW DIFFUSER C/W ONE PIECE WELDED PLENUM, ADJUSTABLE INLET DAMPERS AND FACTORY INSTALLED INSULATION. REFER TO PLANS FOR DIMENSIONS, NECK SIZE AND BALANCING. |
| D | EH PRICE MODEL 510 LOUVERED RETURN GRILLE | B-12 | STEEL LOUVERED FACE GRILLE, 0°BLADE DEFLECTION, NARROW FRAME C/ DUCT CONNECTION. REFER TO PLANS FOR GRILLE SIZE AND BALANCING. |
| E | EH PRICE MODEL STG DOOR GRILLE | -- | HEAVY DUTY STEEL CONSTRUCTION, SIGHT PROOF CORE, MOUNTING TYPE BF AND COUNTERSUNK SCREWHOLES. REFER TO PLANS FOR SIZE. |

NOTE:

1. PRODUCTS FROM ALTERNATIVE MANUFACTURERS WILL BE CONSIDERED, PROVIDED THEY ARE EQUIVALENT AND MEET THE INTENTION OF THE SPECIFICATION.

# GAS WATER HEATER SCHEDULE

| REF. | MANUFAC. MODEL | CAPACITY (L) | NATURAL GAS INPUT | THERMAL EFFICIENCY | GAS CONNECTION (MM) | FLUE VENT/INTAKE (MM) | VOLTAGE | WEIGHT (DRY KG) | REMARKS |
|---|---|---|---|---|---|---|---|---|---|
| HWT-1 | A.O SMITH BTH-120 | 227 | 35KW | 95% | 19ø NPT | 75ø | 120/1/60 | 208 | TERMINATE RELIEF AND CONDENSATE DRAIN INDIRECTLY AT FLOOR DRAIN. CONDENSATE DRAIN TO BE C/W ACID NEUTRALIZER KIT. |

1. PRODUCTS FROM ALTERNATIVE MANUFACTURERS WILL BE CONSIDERED, PROVIDED THEY ARE EQUIVALENT AND MEET THE INTENTION OF THE SPECIFICATION.

# ELECTRIC WATER HEATER SCHEDULE

| REF. | MANUFAC. MODEL | ELEMENT (KW) | CAPACITY (USG) | VOLTAGE | WEIGHT (DRY KG) | REMARKS |
|---|---|---|---|---|---|---|
| HWT-2 | A.O SMITH DEL-6 | 1.5 | 6 | 120/1/60 | 208 | TERMINATE TANK RELIEF DRAIN @ NEAREST FLOOR DRAIN. |

# BACKFLOW PREVENTER SCHEDULE

| REF. | SERVICE | MANUFAC. | MODEL | TYPE | SIZE | WEIGHT (KG) | REMARKS |
|---|---|---|---|---|---|---|---|
| BFP-1 | DCW | ZURN | 375XL | RP | 50ø | - | -REFER TO NOTES BELOW. -REFER TO DETAILS. -BFP-1 TO BE PROVIDED FOR PREMISE ISOLATION. |
| BFP-2 | DCW | ZURN | 375XL | RP | 12ø | - | -REFER TO NOTES BELOW. -BFP-2 TO BE PROVIDED FOR VACUUM PUMP WASH OUT LINE. |
| BFP-3 | DCW | WATTS | LF007 | DCVA | 12ø | - | -REFER TO NOTES BELOW. -REFER TO DETAILS -BFP-3 TO BE PROVIDED FOR ALL HUMIDIFIER SUPPLY LINES. |

NOTES:

1. INSTALL BACKFLOW PREVENTION DEVICES AS PER MANUFACTURER'S INSTALLATION INSTRUCTIONS, LOCAL CODES AND THE AUTHORITIES HAVING JURISDICTION.
2. CONTRACTOR SHALL PROVIDE TEST CERTIFICATES TO OWNER PRIOR TO PROJECT COMPLETION.
3. PRODUCTS FROM ALTERNATIVE MANUFACTURERS WILL BE CONSIDERED, PROVIDED THEY ARE EQUIVALENT AND MEET THE INTENTION OF THE SPECIFICATION.

# BYPASS TERMINAL UNIT SCHEDULE

| TAG | INLET DUCT SIZE | MANUF. | MODEL NO. | COOLING MINIMUM AIRFLOW (L/S) | COOLING MAXIMUM AIRFLOW (L/S) | REMARKS |
|---|---|---|---|---|---|---|
| BT-1 | 6"ø | EH PRICE | LGB | 47 | 57 | BYPASS TERMINAL UNIT SHALL BE C/W ZONE TEMPERATURE SENSOR. |
| BT-2 | 6"ø | EH PRICE | LGB | 47 | 92 | BYPASS TERMINAL UNIT SHALL BE C/W ZONE TEMPERATURE SENSOR. |
| BT-3 | 6"ø | EH PRICE | LGB | 47 | 65 | BYPASS TERMINAL UNIT SHALL BE C/W ZONE TEMPERATURE SENSOR. |

NOTE:

1. PRODUCTS FROM ALTERNATIVE MANUFACTURERS WILL BE CONSIDERED, PROVIDED THEY ARE EQUIVALENT AND MEET THE INTENTION OF THE SPECIFICATION.

ALL MEASUREMENTS ARE TO BE VERIFIED BY THE CONTRACTOR ON SITE AND ANY DISCREPANCIES ARE TO BE REPORTED BEFORE PROCEEDING WITH THE WORK. THE REGION OF DURHAM ASSUMES NO RESPONSIBILITY FOR THE ACCURACY OF THE LOCATION OF EXISTING SERVICES AS INDICATED ON THIS DRAWING. DO NOT SCALE DRAWINGS.

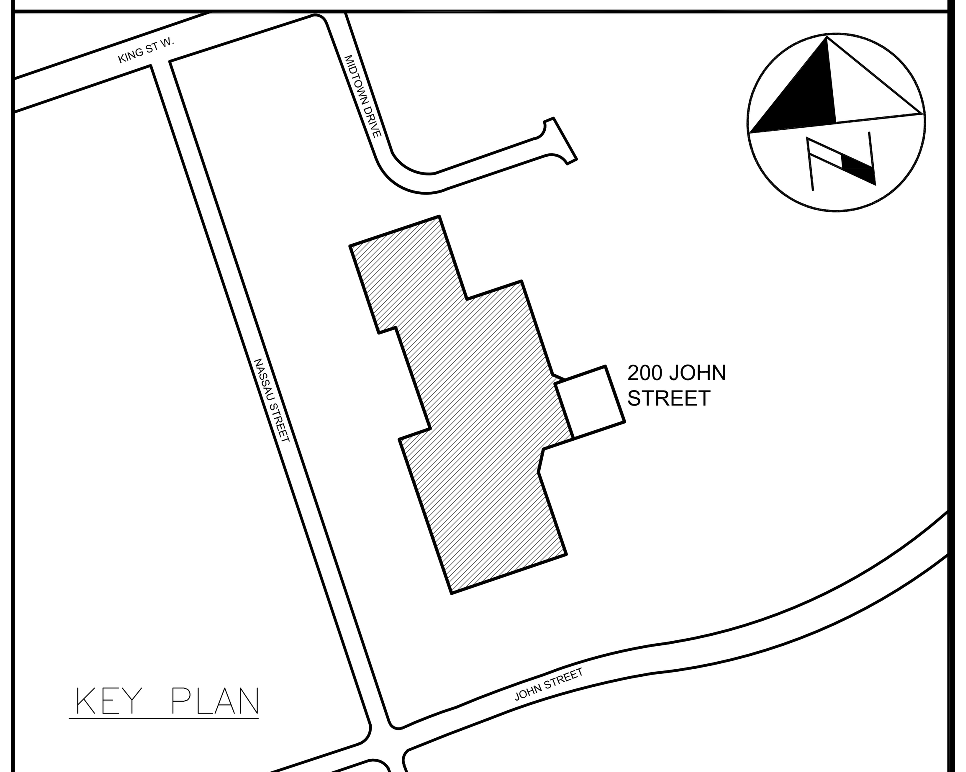


KEY PLAN

CONSULTANT REVISIONS

| NO. | DATE | NAME | REVISIONS |
|---|---|---|---|

PRIME CONSULTANT

BARRY BRYAN ASSOCIATES
Architects
Engineers
Project Managers
250 Water St.
Suite 201
Whitby, Ontario
L1N 0G5
Tel: (905) 666-5252
Fax: (905) 666-5256
e-mail: bba@bba-archeng.com

SUB-CONSULTANT

MADONNA ENGINEERING INC.
93 Woodstream Blvd Unit 10
Woodbridge, Ontario L4L 7Y7
Tel: (905) 265 1911 Fax: (905) 265 1998

LICENSED PROFESSIONAL ENGINEER
MAR 25 2021
A.A. MADONNA
PROVINCE OF ONTARIO

| | |
|---|---|
| DESIGN BY: JM | SCALE NTS |
| DRAWN BY: JM | DATE: FEB 2021 |
| CHECKED BY: AM | CONSULTANT PROJECT NO. 20-0033 |
| APPROVED BY: | |

CONTRACT REVISIONS

| NO. | DATE | NAME | REVISIONS |
|---|---|---|---|
| 3 | MAR 25/21 | JM | ISSUED FOR PERMIT/TENDER |
| 2 | JAN 13/21 | JM | ISSUED FOR 90% CLIENT REVIEW |
| 1 | OCT 30/20 | JM | ISSUED FOR 90% CLIENT REVIEW |

DURHAM REGION

THE REGIONAL MUNICIPALITY OF DURHAM
WORKS DEPARTMENT
DESIGN, CONSTRUCTION & ASSET MANAGEMENT

# RELOCATION OF DENTAL CLINIC TO 200 JOHN ST., OSHAWA MECHANICAL SCHEDULES

| PROPERTY NO. | FACILITY CODE | FACILITIES PROJECT NO. |
|---|---|---|
| N/A | LEA-O-07 | LEA-O-07-19-01 |
| CONTRACT NO. | DRAWING NO. | SHEET NO. |
| T-1032-2021 | M-012 | 030 |

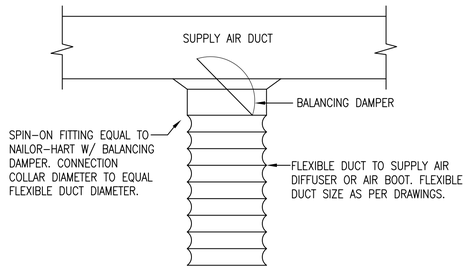


1 M–013 **TYPICAL SPIN–ON FITTING DETAIL**

NTS

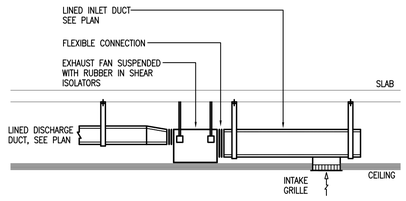


2 M–013 **INLINE EXHAUST FAN DETAIL**

NTS

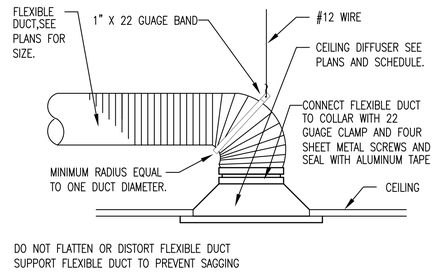


3 M–013 **DIFFUSER SUPPORT DETAIL**

NTS

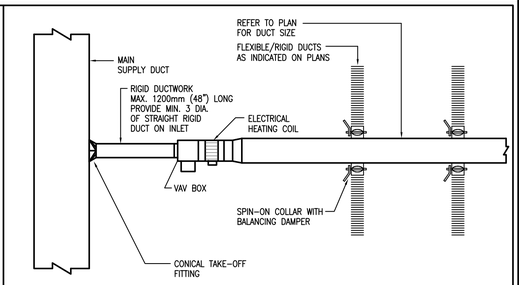


4 M–013 **TYPICAL VAV TERMINAL UNIT DETAIL**

NTS

ALL MEASUREMENTS ARE TO BE VERIFIED BY THE CONTRACTOR ON SITE AND ANY DISCREPANCIES ARE TO BE REPORTED BEFORE PROCEEDING WITH THE WORK. THE REGION OF DURHAM ASSUMES NO RESPONSIBILITY FOR THE ACCURACY OF THE LOCATION OF EXISTING SERVICES AS INDICATED ON THIS DRAWING. DO NOT SCALE DRAWINGS.

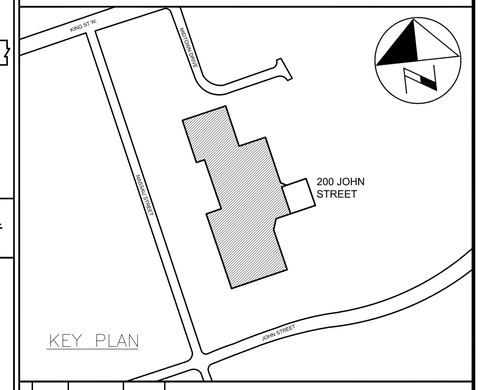


KEY PLAN

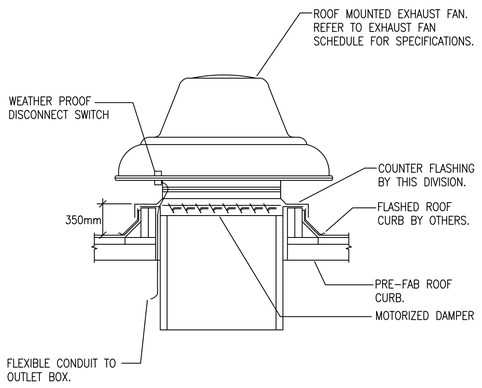


5 M–013 **ROOF MOUNTED EXHAUST FAN DETAIL**

NTS

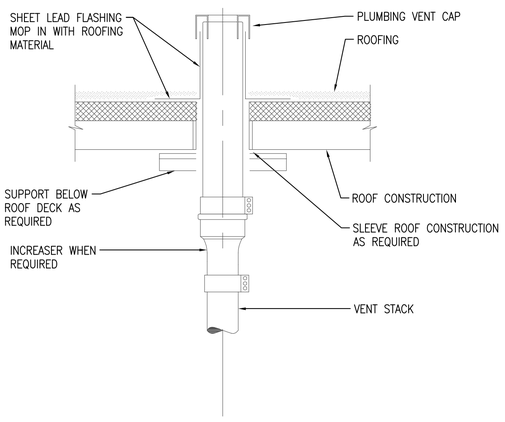


6 M–013 **PLUMBING VENT ROOF PENTRATION DETAIL**

NTS

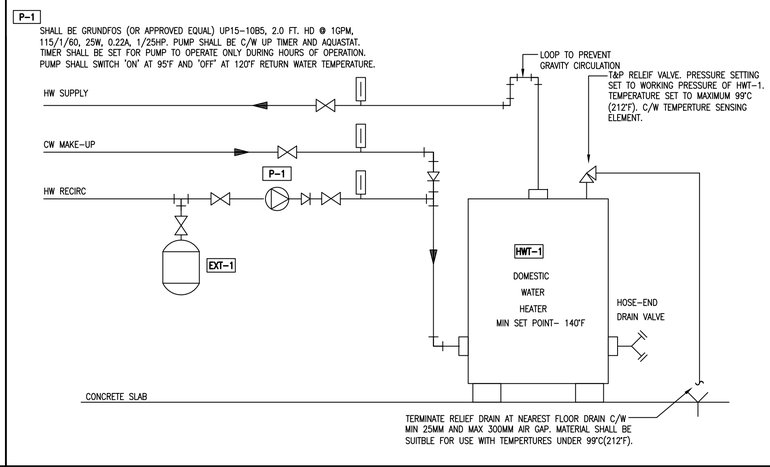


7 M–013 **HOT WATER TANK C.W RECIRCULATION PUMP DETAIL**

NTS

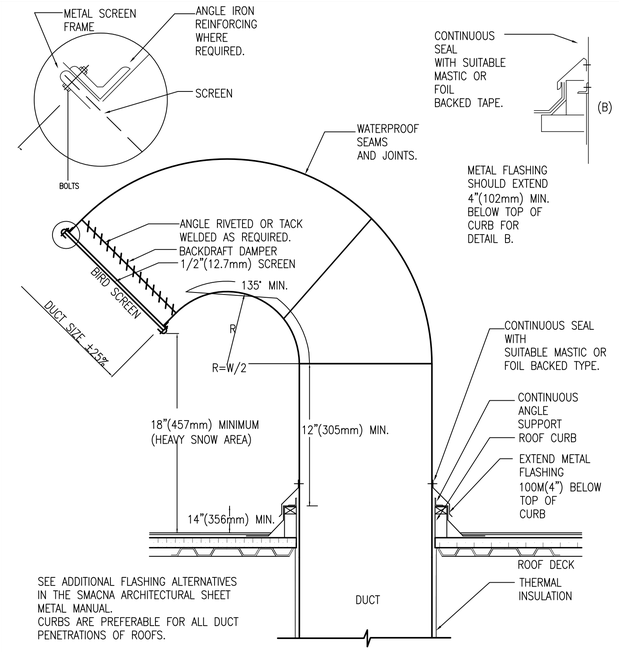


8 M–013 **RECTANGULAR GOOSENECK DETAIL**

NTS

**SLIP CONNECTION**

**SUPPLY AIR CONTROL VALVE**

SCALE: NONE

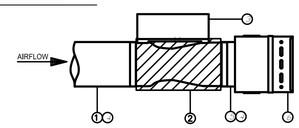


**○ KEY NOTES**

1. ROUND SHEET METAL BRANCH DUCT, SAME NOMINAL SIZE AS AIR CONTROL VALVE INLET SIZE, UNLESS NOTED OTHERWISE.
2. SUPPLY AIR CONTROL VALVE WITH EXTERNAL INSULATION TO PREVENT SWEATING.
3. CONTROL ENCLOSURE TO BE MOUNTED ON TOP, SIDES OR BOTTOM OF VALVES WHERE APPLICABLE TO PROVIDE BEST ACCESSIBILITY POSSIBLE. CONTRACTOR TO SHOW EXACT POSITION ON COORDINATION DRAWINGS.
4. EVENLY SPACED SIX (6) SHEET METAL SCREWS PER A SLIP CONNECTION TO CONNECT VALVE TO DUCT WORK.
5. TRANSITION WITH ACCESS DOORS PROVIDED BY HOT WATER REHEAT COIL MANUFACTURER.
6. HOT WATER REHEAT COIL, REFER TO REHEAT COIL PIPING DETAIL.

**EXHAUST AIR CONTROL VALVE**

SCALE: NONE

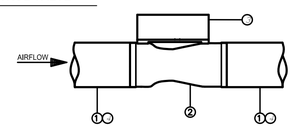


**○ KEY NOTES**

1. ROUND SHEET METAL BRANCH DUCT, SAME NOMINAL SIZE AS AIR CONTROL VALVE INLET SIZE, UNLESS NOTED OTHERWISE.
2. EXHAUST AIR CONTROL VALVE.
3. CONTROL ENCLOSURE TO BE MOUNTED ON TOP, SIDES OR BOTTOM OF VALVES WHERE APPLICABLE TO PROVIDE BEST ACCESSIBILITY POSSIBLE. CONTRACTOR TO SHOW EXACT POSITION ON COORDINATION DRAWINGS.
4. EVENLY SPACED SIX (6) SHEET METAL SCREWS PER A SLIP CONNECTION TO CONNECT VALVE TO DUCT WORK.

9 M–013 **VENTURI VALVE INSTALLATION DETAIL**

NTS

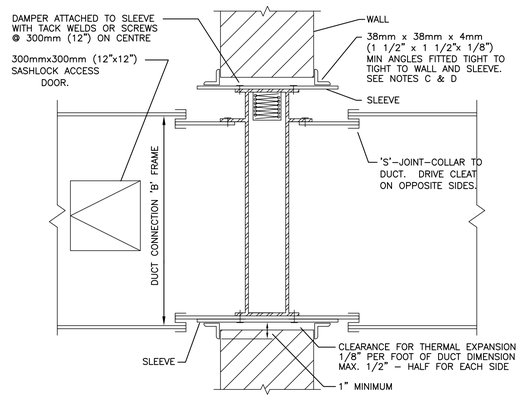


VERTICAL TYPE "B" FIRE DAMPER INSTALLATION DETAIL

N.T.S.

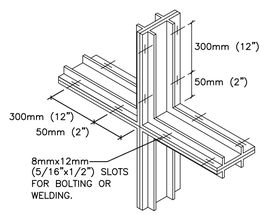


JOINING OF MULTIPLE SECTIONS

NOTES:

A. SLEEVE MAY BE SAME GAUGE AS DUCT WHEN "S" AND DRIVE CONNECTIONS ARE USED.

B. INSTALLATION TO CONFORM TO N.F.P.A. 90A AND AUTHORITY HAVING JURISDICTION.

C. WHERE ANGLES ARE ATTACHED TO SLEEVE A MIN. OF 2 FIXINGS ON EACH SIDE AT A MAX. OF 300mm (12") CENTRES MUST BE USED.

D. MAX. SIZE OF ULC LABELLED F.D'S ARE:

| MOUNTING | INDIVIDUAL | ASSEMBLY |
|---|---|---|
| VERTICAL | 1500mm x 1200mm (60"x48") | 3000mm x 1800mm (120"x72") |

IF OPENING SIZE EXCEEDS ABOVE DIMENSIONS THEN DAMPER TO BE FITTED IN UNITS WITH MULLION BETWEEN.

10 M–013 **VERTICAL FIRE DAMPER DETAIL**

NTS

CONSULTANT REVISIONS

| NO. | DATE | NAME | REVISIONS |
|---|---|---|---|
| | | | |
| | | | |
| | | | |
| | | | |
| | | | |
| | | | |
| | | | |
| | | | |

PRIME CONSULTANT

BARRY BRYAN ASSOCIATES
Architects
Engineers
Project Managers
250 Water St.
Suite 201
Whitby, Ontario
L1N 0G5
Tel: (905) 666-5252
Fax: (905) 666-5256
e-mail: bba@bba-archeng.com

SUB–CONSULTANT

MADONNA ENGINEERING INC.
93 Woodstream Blvd Unit 10
Woodbridge, Ontario L4L 7Y7
Tel: (905) 265 1911 Fax: (905) 265 1998

LICENSED PROFESSIONAL ENGINEER — MAR 25 2021 — A.A. MADONNA — PROVINCE OF ONTARIO

| | |
|---|---|
| DESIGN BY: JM | SCALE: NTS |
| DRAWN BY: JM | DATE: FEB 2021 |
| CHECKED BY: AM | CONSULTANT PROJECT NO. 20–0033 |
| APPROVED BY: | |

CONTRACT REVISIONS

| NO. | DATE | NAME | REVISIONS |
|---|---|---|---|
| | | | |
| | | | |
| | | | |
| | | | |
| | | | |
| 3 | MAR 25/21 | JM | ISSUED FOR PERMIT/TENDER |
| 2 | JAN 13/21 | JM | ISSUED FOR 90% CLIENT REVIEW |
| 1 | OCT 30/20 | JM | ISSUED FOR 90% CLIENT REVIEW |

DURHAM REGION

THE REGIONAL MUNICIPALITY OF DURHAM

WORKS DEPARTMENT

DESIGN, CONSTRUCTION & ASSET MANAGEMENT

# RELOCATION OF DENTAL CLINIC TO 200 JOHN ST., OSHAWA MECHANICAL DETAILS

| PROPERTY NO. | FACILITY CODE | FACILITIES PROJECT NO. |
|---|---|---|
| N/A | LEA–O–07 | LEA–O–07–19–01 |
| CONTRACT NO. | DRAWING NO. | SHEET NO. |
| T–1032–2021 | M–013 | 031 |

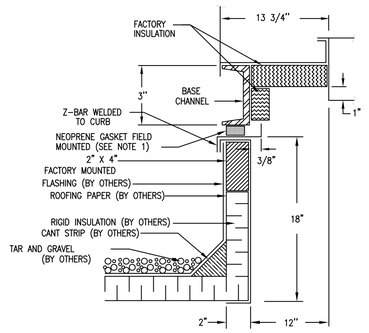


NOTES:

1. 3/8" X 3/4" NEOPRENE GASKET FOR 2" TO 4" CHANNELS, OR 3/8" X 1-1/2" NEOPRENE GASKET FOR CHANNELS 6" AND OVER.
2. CURB MAY BE BROKEN DOWN FOR SHIPPING. IN THESE CASES, FIELD ASSEMBLY WILL BE REQUIRED BY INSTALLING CONTRACTOR.
3. CONTINUOUS BASE SUPPORT TO CURB PANELS, INCLUDING THE CENTER SUPPORT PANEL IF SUPPLIED, IS REQUIRED BY OTHERS.
4. DIMENSIONS GIVEN IN INCHES ONLY
5. ROOF CURB SUPPLIED BY ENGINEERED AIR.

1 / M-014 ROOF CURB INSTALLATION DETAIL
NTS

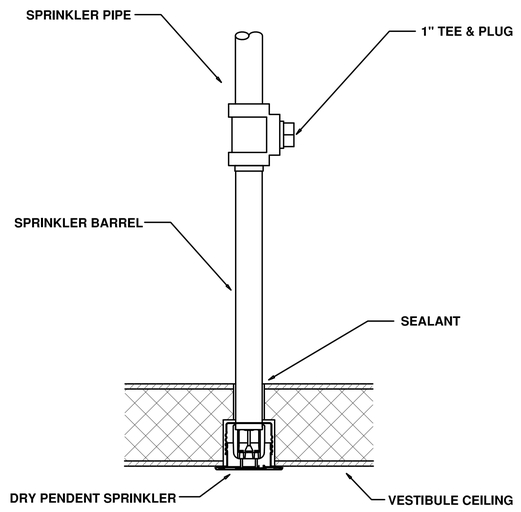


2 / M-014 DRY PENDENT SPRINKLER DETAIL
NTS

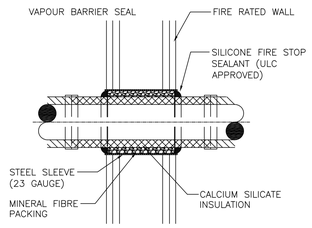


FIRE WALL PENETRATIONS

NOTES:

ALL PIPE PENETRATIONS THROUGH THE FIRE RATED SLAB.WALL SHALL BE INSULATED WITH MOULDED HIGH TEMPERATURE HUDROUS CALCIUM SILICATE INSULATION USING AVAILABLE PREFORMED SHAPES. THE INSULATION SHALL BE INSTALLED AS OUTLINED BELOW.

THE INSULATION PRODUCT IS TO BE 25mm THICK CALCIUM SILICATE INSULATION, MANUFACTURED BY MANVILLE (THERMO-12) OR MANSON (CALMAX).

THE INSULATION IS TO BE INSTALLED ON THE PIPING THAT PENETRATES THE FIRE RATED SLAB/WALL FROM THE UNDERSIDE OF TH RATED SLAB TO A POINT 150 BEYOND THE POINT OF PENETRATION.

INSULATION SHALL BE APPLIED TO CLEAN, DRY SURFACES OF STRAIGHT RUN PIPE WITH ALL JOINTS BUTTED TIGHTLY EO ENSURE A SNUG FIT.

MINERAL FIBRE PACKING TO BE MANVILLE (CERAFIBRE) OR CARBORUNDUM (FIBERFRAX) TIGHTLY PACKED.

FIRE STOPPING SHALL BE INSTALLED BY A QUALIFIED APPLICATOR.

2. OVERLAP TABS AT CORNERS BY 50mm FOR AID TIGHT ENCLOSURE.

3 / M-014 FIRE RATED SLAB PENETRATION DETAIL
NTS

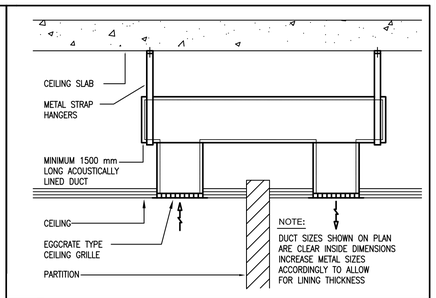


4 / M-014 TRANSFER AIR DUCTWORK DETAIL
NTS

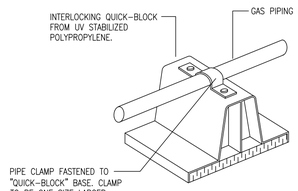


5 / M-014 GAS PIPING SUPPORT DETAIL
NTS

NOTES:

1. THIS INSTALLATION SCHEMATIC IS A GENERAL REPRESENTATION. THIS CONTRACTOR SHALL CONSULT WITH THE MANUFACTURER'S INSTALLATION MANUAL.
2. HUMIDIFIER SHALL BE MOUNTED ON WALL AS SHOWN ON MECHANICAL PLANS. PROVIDE ALL NECESSARY MOUNTING HARDWARE.
3. STMS PIPING SIZING SHALL BE PROVIDED BY MANUFACTURER.

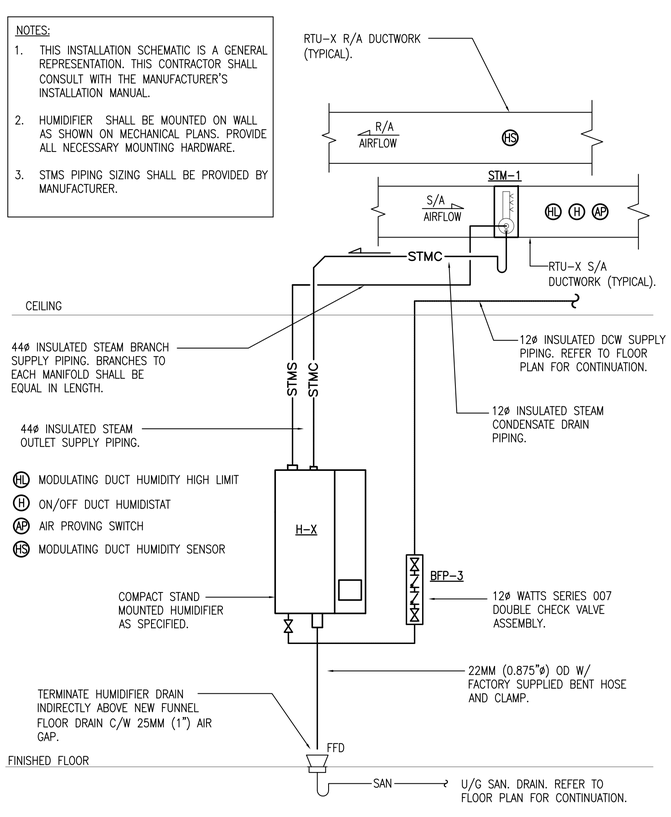


6 / M-014 HUMIDIFIER INSTALLATION DETAIL
NTS

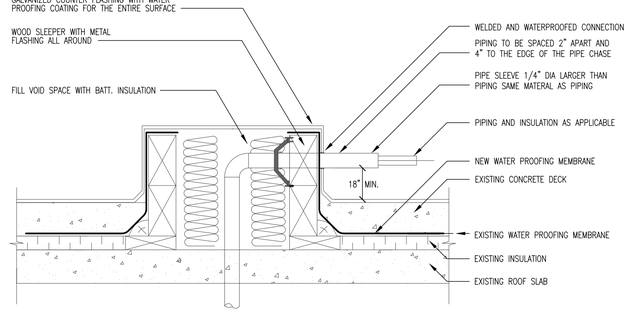


7 / M-014 DETAIL OF PIPING GROUP PENETRATION ON ROOF
NTS

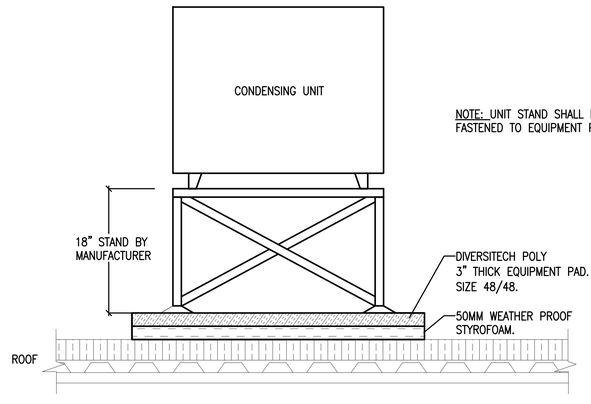


8 / M-014 CONDENSING UNIT ROOF MOUNTING DETAIL
NTS

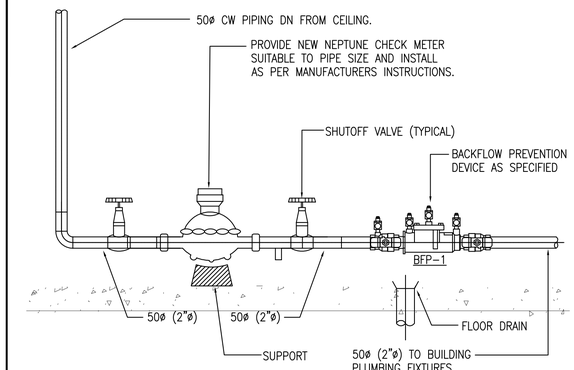


9 / M-014 CHECK METER INSTALLATION DETAIL
NTS

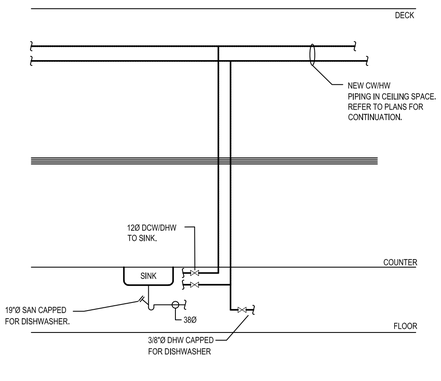


10 / M-014 KITCHEN SINK CONNECTION DETAIL
NTS

ALL MEASUREMENTS ARE TO BE VERIFIED BY THE CONTRACTOR ON SITE AND ANY DISCREPANCIES ARE TO BE REPORTED BEFORE PROCEEDING WITH THE WORK. THE REGION OF DURHAM ASSUMES NO RESPONSIBILITY FOR THE ACCURACY OF THE LOCATION OF EXISTING SERVICES AS INDICATED ON THIS DRAWING. DO NOT SCALE DRAWINGS.

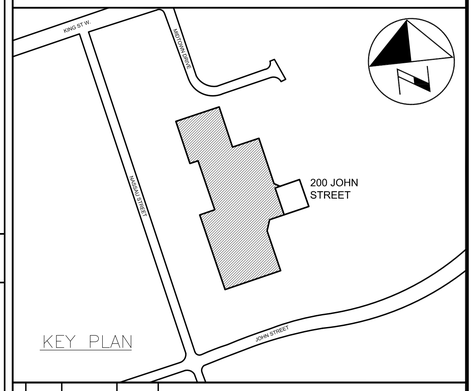


CONSULTANT REVISIONS

| NO. | DATE | NAME | REVISIONS |
|---|---|---|---|
| | | | |
| | | | |
| | | | |
| | | | |
| | | | |
| | | | |
| | | | |
| | | | |


PRIME CONSULTANT
BARRY BRYAN ASSOCIATES
Architects
Engineers
Project Managers
250 Water St.
Suite 201
Whitby, Ontario
L1N 0G5
Tel: (905) 666-5252
Fax: (905) 666-5256
e-mail: bba@bba-archeng.com

SUB-CONSULTANT
MEI
MADONNA ENGINEERING INC.
93 Woodstream Blvd Unit 10
Woodbridge, Ontario L4L 7Y7
Tel: (905) 265 1911 Fax: (905) 265 1998


LICENSED PROFESSIONAL ENGINEER
MAR 25 2021
A.A. MADONNA
PROVINCE OF ONTARIO

| | |
|---|---|
| DESIGN BY: JM | SCALE NTS |
| DRAWN BY: JM | DATE: FEB 2021 |
| CHECKED BY: AM | CONSULTANT PROJECT NO. 20-0033 |
| APPROVED BY: | |

CONTRACT REVISIONS

| NO. | DATE | NAME | REVISIONS |
|---|---|---|---|
| | | | |
| | | | |
| | | | |
| | | | |
| | | | |
| 3 | MAR 25/21 | JM | ISSUED FOR PERMIT/TENDER |
| 2 | JAN 13/21 | JM | ISSUED FOR 90% CLIENT REVIEW |
| 1 | OCT 30/20 | JM | ISSUED FOR 90% CLIENT REVIEW |

THE REGIONAL MUNICIPALITY OF DURHAM
WORKS DEPARTMENT
DESIGN, CONSTRUCTION & ASSET MANAGEMENT

# RELOCATION OF DENTAL CLINIC TO 200 JOHN ST., OSHAWA MECHANICAL DETAILS (CONT'D)

| PROPERTY NO. | FACILITY CODE | FACILITIES PROJECT NO. |
|---|---|---|
| N/A | LEA-O-07 | LEA-O-07-19-01 |
| CONTRACT NO. | DRAWING NO. | SHEET NO. |
| T-1032-2021 | M-014 | 032 |

## SUPPLY AIR & RETURN VAV OPERATION (COOLING ONLY)

SPACE TEMPERATURE CONTROL:

- WHEN THE ZONE TEMPERATURE IS BELOW THE COOLING SETPOINT THE SUPPLY AIR VAV WILL BE AT THE MINIMUM CFM.
- ON A RISE IN ZONE TEMPERATURE ABOVE THE COOLING SETPOINT THE SUPPLY AIR VAV WILL BE AT THE MAXIMUM CFM.

RETURN AIR VAV CONTROL:

- THE AIRFLOW CONTROL SYSTEM WILL CONTROL THE RETURN VAV TO MAINTAIN THE DESIRED AIRFLOW TARGET.
- IF THE ROOM IS REQUIRED TO BE NEUTRAL PRESSURE THE RETURN VAV CFM SHALL MATCH THE SUPPLY VAV CFM. REFER TO 'VAV TERMINAL SCHEDULE'.
- IF THE ROOM IS REQUIRED TO BE POSITIVELY OR NEGATIVELY PRESSURIZED REFER TO 'VAV TERMINAL SCHEDULE' FOR THE REQUIRED AIR FLOW OFFSETS.

## SUPPLY AIR & RETURN VAV OPERATION WITH MECHANICAL HEATING

SPACE TEMPERATURE CONTROL:

- WHEN THE ZONE TEMPERATURE IS BETWEEN THE OCCUPIED HEATING AND COOLING SETPOINTS, THE SUPPLY AIR VAV WILL BE AT THE MINIMUM CFM.
- ON A RISE IN ZONE TEMPERATURE ABOVE THE COOLING SETPOINT THE SUPPLY AIR VAV WILL BE AT THE MAXIMUM CFM AND THERE WILL BE NO MECHANICAL HEATING.
- ON A DROP IN ZONE TEMPERATURE BELOW THE HEATING SETPOINT, THE REHEAT COIL/BASEBOARD HEATER WILL MAINTAIN ZONE TEMPERATURE AND THE SUPPLY AIR VAV WILL BE AT THE MINIMUM CFM.

RETURN AIR VAV CONTROL:

- THE AIRFLOW CONTROL SYSTEM WILL CONTROL THE RETURN VAV TO MAINTAIN THE DESIRED AIRFLOW TARGET.
- IF THE ROOM IS REQUIRED TO BE NEUTRAL PRESSURE THE RETURN VAV CFM SHALL MATCH THE SUPPLY VAV CFM. REFER TO 'VAV TERMINAL SCHEDULE'.
- IF THE ROOM IS REQUIRED TO BE POSITIVELY OR NEGATIVELY PRESSURIZED REFER TO 'VAV TERMINAL SCHEDULE' FOR THE REQUIRED AIR FLOW OFFSETS.

## SUPPLY & RETURN AIR VAV OPERATION (CORRIDORS)

- SUPPLY AND RETURN AIR VAV SHALL MAINTAIN FIXED CFM AT ALL TIMES.
- ON A DROP IN ZONE TEMPERATURE BELOW THE HEATING SETPOINT THE SUPPLY AIR VAV WILL MAINTAIN A FIXED CFM AND THE ELECTRIC REHEAT COIL WILL TURN ON TO MAINTAIN ZONE TEMPERATURE. THE DUCT TEMPERATURE SENSOR WILL DICTATE THE AIR TEMPERATURE WHICH THE COIL MUST HEAT TO.

HEATING MODE DAT = 80°F

## SUPPLY & RETURN AIR VALVE OPERATION (OPERATORY 1-7 )

SUPPLY VALVE AIR FLOW CONTROL:

- WHILE IN OCCUPIED MODE, THE AIRFLOW CONTROL SYSTEM WILL TARGET THE MAXIMUM AIR FLOWS.
- WHILE IN UNOCCUPIED MODE, THE AIR FLOW CONTROL SYSTEM WILL TARGET THE MINIMUM AIR FLOWS.
- OCCUPIED MODE IS THE DEFAULT ROOM MODE.

RETURN VALVE AIRFLOW CONTROL:

- THE AIRFLOW CONTROL SYSTEM WILL CONTROL THE RETURN VALVE TO MAINTAIN THE DESIRED AIR FLOW OFFSET.
- REFER TO VAV TERMINAL SCHEDULE FOR THE REQUIRED AIR FLOW OFFSETS.

SPACE TEMPERATURE CONTROL WITH DAT LIMIT:

SINGLE STAGE REHEAT – STAGE 1: MODULATING REHEAT COIL:

THE AIRFLOW CONTROL SYSTEM WILL MONITOR THE ROOM TEMPERATURE FROM A WALL MOUNTED ROOM TEMPERATURE SENSOR. IN THE FIRST HEATING STAGE, THE REHEAT COIL WILL MODULATE WITHIN THE DISCHARGE AIR TEMPERATURE LIMITS TO MAINTAIN SPACE TEMPERATURE.

DISCHARGE AIR TEMPERATURE LIMITS: DAT $\leq$ 80°F

ROOM PRESSURE MONITORING:

- A ROOM PRESSURE SENSOR WILL MEASURE THE DIFFERENTIAL PRESSURE BETWEEN THE ROOM AND ADJOINING SPACE. THE PMT WILL DISPLAY THE ROOM PRESSURE LOCALLY.

LOW ROOM PRESSURE ALARM: THE PMT WILL PROVIDE LOCAL VISUAL AND AUDIBLE ALERT WHEN THE ROOM PRESSURE FALLS BELOW THE ADJUSTABLE LOW ROOM PRESSURE ALARM LIMIT.

HIGH ROOM PRESSURE ALARM: THE PMT WILL PROVIDE LOCAL VISUAL AND AUDIBLE ALERT WHEN THE ROOM PRESSURE RISES ABOVE THE ADJUSTABLE HIGH ROOM PRESSURE ALARM LIMIT.

## RTU 1 & 2 SEQUENCE OF OPERATION

NORMAL OPERATION

- THE RTU WILL RUN CONTINUOUSLY AT ALL TIMES IN ACCORDANCE WITH THE OPERATION OF THE SUPPLY AND RETURN VAV TERMINAL UNITS.
- THE OUTDOOR AIR MINIMUM DAMPER POSITION SHALL BE SET AT 33% OF THE TOTAL SUPPLY AIR CFM.
- THE SUPPLY FAN VFD WILL MODULATE THE FAN SPEED TO MAINTAIN +1" OF DUCT STATIC PRESSURE IN THE MAIN SUPPLY DUCTWORK.
- THE RETURN FAN VFD SHALL MODULATE THE FAN SPEED TO MAINTAIN -1" OF DUCT STATIC STATIC PRESSURING IN THE MAIN RETURN DUCTWORK.
- WHEN THE UNIT IS RUNNING, THE 2 STAGES OF MECHANICAL COOLING, ECONOMIZER AND MODULATING GAS HEAT WILL CYCLE IN ORDER TO MAINTAIN A CONSTANT SUPPLY AIR TEMPERATURE OF 58°F IN THE SUMMER AND 65°F IN THE WINTER.
- THE UNIT IS EQUIPPED WITH MODULATING GAS HEAT FROM 33%-100% TO MAINTAIN THE REQUIRED DISCHARGE AIR TEMPERATURE.
- SHOULD GAS HEAT FAIL, AND THE SUPPLY AIR TEMP DROP BELOW 55°F, THE OUTDOOR AIR DAMPERS WILL BEGIN TO MODULATE CLOSE AND AN ALARM GENERATED.

## ROOM PRESSURIZATION SCHEDULE

| ROOM NAME | ROOM DATA | | | | SERVED BY SYSTEM | | |
|---|---|---|---|---|---|---|---|
| | AREA (SQ.FT) | CEILING HEIGHT (FT) | MIN DIFFERNTIAL PRESSURE (IN.WC) | SPACE PRESSURIZATION (POS, NEG, EQUAL) | SUPPLY | RETURN | EXHAUST |
| AREAS SERVED BY RTU-2: | | | | | | | |
| CORRIDOR C06/7 | 530 | 10 | -- | EQUAL | RTU-2 | RTU-2 | - |
| CORRIDOR C02/3 | 381 | 10 | -- | EQUAL | RTU-2 | RTU-2 | |
| DENTURIST LAB 129 | 242 | 9 | 0.01 | NEG (EXHAUST) | RTU-2 | - | EF-4 |
| LOCKERS 128 | 145 | 9 | 0.01 | NEG | RTU-2 | RTU-2 | - |
| KITCHEN 127 | 172 | 9 | 0.01 | NEG (EXHAUST) | RTU-2 | - | EF-3 |
| MEETING ROOM 126 | 415 | 10 | -- | EQUAL | RTU-2 | RTU-2 | - |
| OPERATORY 1 | 250 | 9 | 0.01 | POS | RTU-2 | RTU-2 | - |
| OPERATORY 2-5 | 106 | 9 | 0.01 | POS | RTU-2 | RTU-2 | - |
| OPERATORY 6-7 | 110 | 9 | 0.01 | POS | RTU-2 | RTU-2 | - |
| ARES SERVED BY RTU-1: | | | | | | | |
| PAN ROOM | 63 | 10 | -- | EQUAL | RTU-1 | RTU-1 | - |
| ADMIN/RECEPTION | 552 | 10 | -- | EQUAL | RTU-1 | RTU-1 | - |
| WAITING AREA 101 | 418 | 9.5 | 0.01 | NEG | RTU-1 | RTU-1 | - |
| CONSULT ROOM 1 | 96 | 8.5 | -- | EQUAL | RTU-1 | RTU-1 | - |
| CONSULT ROOM 2 | 96 | 8.5 | -- | EQUAL | RTU-1 | RTU-1 | - |

## MECHANICAL LEGEND

| SYMBOL | DESCRIPTION |
|---|---|
| | RIGID DUCTWORK |
| | FLEXIBLE DUCTWORK |
| | NEW CONTROL WIRING |
| | SPIN-ON CONNECTION W/BALANCE DAMPER |
| | LINEAR SLOT DIFFUSER |
| A-B/C<br>XX L/S | A – DIFFUSER OR GRILLE TAG<br>B – DIFFUSER NECK OR GRILLE SIZE<br>C – LINEAR SLOT DIFFUSER LENGTH<br>XX – AIRFLOW BALANCE<br>L/S – LITERS PER SECOND |
| | SQUARE SUPPLY AIR DIFFUSER |
| | RETURN / EXHAUST AIR GRILLE |
| | TRANSFER AIR DUCTWORK WITH ACOUSTIC INSULATION |
| | DUCT WITH THERMAL INSULATION AND VAPOUR BARRIER |
| | DUCT WITH ACOUSTIC INSULATION |
| | DUCT WITH ACOUSTIC OR THERMAL INSULATION AND VAPOUR BARRIER |
| | SUPPLY AIR DUCTWORK UP OR OUT OF PAGE |
| | RETURN AIR DUCTWORK UP OR OUT OF PAGE |
| | SUPPLY AIR DUCTWORK DOWN OR INTO PAGE |
| | RETURN AIR DUCTWORK DOWN OR INTO PAGE |
| U/C | UNDERCUT IN DOOR |
| X | DRAWING NOTE |
| XX-X | EQUIPMENT TAG |
| SAN | UNDERGROUND SANITARY DRAINAGE PIPING |
| SAN | ABOVE GROUND SANITARY DRAINAGE PIPING |
| V | VENT PIPING |
| COND | CONDENSATE DRAIN PIPING |
| P.SAN | PUMPED SANITARY DRAIN |
| | DOMESTIC COLD WATER PIPING |
| | DOMESTIC HOT WATER PIPING |
| | DOMESTIC HOT WATER RECIRCULATION PIPING |
| STMS | STEAM SUPPLY PIPING |
| STMC | STEAM CONDENSATE RETURN PIPING |
| FD,HD | FLOOR DRAIN, HUB DRAIN |
| CO | BURIED CLEANOUT |
| CO | ABOVE GROUND CLEAN OUT |
| | PIPE/DUCTWORK UP |
| | PIPING DOWN |
| | CONTINUATION OF PIPE/DUCTWORK |
| | SANITARY 'P' TRAP |
| | ISOLATION VALVE |
| | TEMPERATURE AND PRESSURE RELIEF VALVE |
| | CHECK VALVE |
| | 3-WAY VALVE |
| | CONTROL VALVE |
| CBV | CIRCUIT BALANCING VALVE |
| W | WATER METER |
| | BACKFLOW PREVENTOR |
| T | THERMOSTAT/SENSOR |
| $ | SWITCH |
| | IN-LINE EXHAUST FAN |
| | CABINET/CEILING EXHAUST FAN |
| T | TEMPERATURE GAUGE |
| P | PRESSURE GAUGE |
| | PUMP |
| | DUCT MOUNTED HUMIDIFIER STEAM MANIFOLD |
| FE | FIRE EXTINGUISHER C/W WALL MOUNT HOOKS |
| FE | EXISTING FIRE EXTINGUISHER TO BE RELOCATED |
| | NEW RECESSED PENDENT SPRINKLER HEAD |
| R | RECESSED PENDENT SPRINKLER HEAD TO BE RELOCATED |
| RE | RECESSED PENDENT SPRINKLER HEAD TO BE REMOVED |
| F/A | FRESH AIR |
| R/A | RETURN AIR |
| S/A | SUPPLY AIR |
| E/A | EXHAUST AIR |
| B/D | BALANCING DAMPER |
| BDD | BACKDRAFT DAMPER |
| F/D | FIRE DAMPER |
| CW | DOMESTIC COLD WATER |
| HW | DOMESTIC HOT WATER |
| HWR | DOMESTIC HOT WATER RECIRCULATION |
| BFP | BACKFLOW PREVENTER |
| TYP | TYPICAL |
| FFH | FORCE FLOW HEATER |
| STM | STEAM DISTRIBUTION MANIFOLD |
| U/G | UNDERGROUND (I.E. UNDERGROUND SANITARY DRAINAGE) |
| A / B C | A – HEATER REFERENCE TAG<br>B – FIN TUBE ELEMENT LENGTH OR HEATER TYPE<br>C – HEAT OUTPUT |
| X / XXXX | X – DRAWING OR DETAIL NUMBER<br>XXXX – SHEET NUMBER<br>DIRECTION OF VIEW |
| X / XXXX | X – DRAWING OR DETAIL NUMBER<br>XXXX – SHEET NUMBER |

ALL MEASUREMENTS ARE TO BE VERIFIED BY THE CONTRACTOR ON SITE AND ANY DISCREPANCIES ARE TO BE REPORTED BEFORE PROCEEDING WITH THE WORK. THE REGION OF DURHAM ASSUMES NO RESPONSIBILITY FOR THE ACCURACY OF THE LOCATION OF EXISTING SERVICES AS INDICATED ON THIS DRAWING. DO NOT SCALE DRAWINGS.

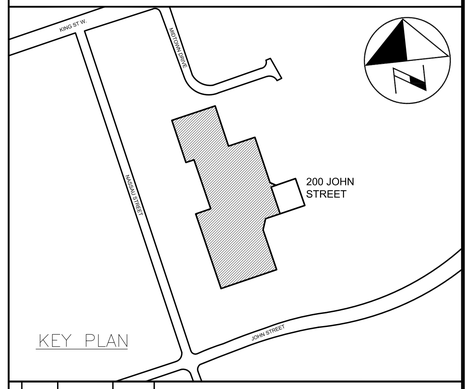


CONSULTANT REVISIONS

| NO. | DATE | NAME | REVISIONS |
|---|---|---|---|

PRIME CONSULTANT

BARRY BRYAN ASSOCIATES
Architects
Engineers
Project Managers
250 Water St.
Suite 201
Whitby, Ontario
L1N 0G5
Tel: (905) 666-5252
Fax: (905) 666-5256
e-mail: bba@bba-archeng.com

SUB-CONSULTANT

MADONNA ENGINEERING INC.
93 Woodstream Blvd Unit 10
Woodbridge, Ontario L4L 7Y7
Tel: (905) 265 1911 Fax: (905) 265 1998

LICENSED PROFESSIONAL ENGINEER
MAR 25 2021
A.A. MADONNA
PROVINCE OF ONTARIO

| | |
|---|---|
| DESIGN BY: JM | SCALE NTS |
| DRAWN BY: JM | DATE: FEB 2021 |
| CHECKED BY: AM | CONSULTANT PROJECT NO. 20-0033 |
| APPROVED BY: | |

CONTRACT REVISIONS

| NO. | DATE | NAME | REVISIONS |
|---|---|---|---|
| 1 | FEB 12/21 | JM | ISSUED FOR PERMIT/TENDER |

THE REGIONAL MUNICIPALITY OF DURHAM
WORKS DEPARTMENT
DESIGN, CONSTRUCTION & ASSET MANAGEMENT

# RELOCATION OF DENTAL CLINIC TO 200 JOHN ST., OSHAWA

## CONTROL SEQUENCES, LEGEND & DRAWING LIST

| PROPERTY NO. | FACILITY CODE | FACILITIES PROJECT NO. |
|---|---|---|
| N/A | LEA-0-07 | LEA-0-07-19-01 |
| CONTRACT NO. | DRAWING NO. | SHEET NO. |
| T-1032-2021 | M-015 | 033 |

# LEGEND

| | |
|---|---|
| | EXISTING CEILING MOUNTED/SUSPENDED FIXTURE CONNECTED TO BASE BUILDING UTILITY LIGHTING CIRCUIT. |
| | CEILING MOUNTED/SUSPENDED FIXTURE. CONNECT TO BASE BUILDING UTILITY LIGHTING CIRCUIT. |
| | CEILING MOUNTED/SUSPENDED FIXTURE. CONNECT TO NON SWITCHED BASE BUILDING 24–HOUR LIGHTING CIRCUIT. |
| | RECESSED/PENDENT DOWNLIGHT. CONNECT TO SWITCHED BASE BUILDING UTILITY LIGHTING CIRCUIT. |
| | RECESSED/PENDENT DOWNLIGHT. CONNECT TO NON SWITCHED BASE BUILDING 24–HOUR LIGHTING CIRCUIT. |
| | CEILING OR WALL MOUNTED "EXIT" LIGHT. |
| D1 M1 | EMERGENCY BATTERY UNIT, TYPE 'D1', SOURCE 'M1'. BATTERY SHALL BE MOUNTED AT HIGH LEVEL. |
| D2 M2 | REMOTE EMERGENCY LIGHTING FIXTURE, TYPE 'D2' FED FROM SOURCE 'M2'. |
| $ | WHITE DECORA STYLE LIGHT SWITCH, VOLTAGE AND CURRENT RATINGS AS REQUIRED. |
| $OVX | WALL MOUNTED ROOM LIGHT SWITCH WATT STOPPER LMSW–10X OR APPROVED EQUAL.<br>'OV1' DENOTES ONE (1) DIGITAL PUSH BUTTON.<br>'OV2' DENOTES TWO (2) DIGITAL PUSH BUTTONS.<br>'OV3' DENOTES THREE (3) DIGITAL PUSH BUTTONS.<br>'OV4' DENOTES FOUR (4) DIGITAL PUSH BUTTONS. |
| $OWX | WALL MOUNTED AREA LIGHT SWITCH WATT STOPPER LMSW–10X OR APPROVED EQUAL.<br>'OW2' DENOTES TWO (2) DIGITAL PUSH BUTTONS.<br>'OW3' DENOTES THREE (3) DIGITAL PUSH BUTTONS.<br>'OW4' DENOTES FOUR (4) DIGITAL PUSH BUTTONS.<br>'OW5' DENOTES FIVE (5) DIGITAL PUSH BUTTONS.<br>'OW6' DENOTES SIX (6) DIGITAL PUSH BUTTONS. |
| $TS | 'TS' DENOTES WALL MOUNTED TIME SWITCH WATT STOPPER TS–400–24 OR APPROVED EQUAL C/W POWER PACK (VOLTAGE RATINGS TO SUIT LIGHTING LOADS) AND BOTH VISUAL AND AUDIBLE WARNING (TIMER PRESET AT 20 MINUTE TIME OUT SETTING). |
| $WS | 'WS' DENOTES CRESTRON WALL STATION ROUGH–IN |
| GFI | 15AMP/120VOLT, U–GROUND DUPLEX RECEPTACLE. GFI DENOTES OUTLET C/W GROUND FAULT INTERRUPT PROTECTION. |
| | RECEPTACLE, REQUIREMENT AS NOTED |
| 20/120 | 20A/120V DUPLEX RECEPTACLE, CSA 5–20R (T–SLOT). HUBBELL DR20 SERIES. |
| PL 20/120 | 20A/120V PLUG LOAD CONTROLLED DUPLEX RECEPTACLE, CSA 5–20R (T–SLOT). HUBBELL DR20C2WHI SERIES. |
| GFI 20/120 | 20A/120V HOSPITAL GRADE DUPLEX RECEPTACLE, CSA 5–20R (T–SLOT). HUBBELL 2182 SERIES. GFI DENOTES OUTLET C/W GROUND FAULT INTERRUPT PROTECTION. HUBBELL GFRST83XX SERIES. |
| | DIRECT CONNECTION. |
| | STARTER. |
| | NON–FUSED HORSEPOWER RATED VISIBLE BLADE HEAVY DUTY DISCONNECT SWITCH C/W PADLOCK PROVISION IN OFF POSITION |
| F 30/15A/3P | VISIBLE BLADE HEAVY DUTY DISCONNECT SWITCH C/W PADLOCK PROVISION IN OFF POSITION FUSED AT '15A' |
| S 30/15A/3P | COMBINATION STARTER C/W FUSES, OVERLOAD PROTECTION, CONTROL TRANSFORMER, 2 NO AND 2 NC CONTACTS, PILOT LIGHT AND HOA. FUSED AT '15A'. |
| RP–A–X(D) | CIRCUIT 'X' FED FROM RECEPTACLE PANEL 'A'. '(D)' DENOTES DESIGNATED CIRCUIT FOR ISOLATED GROUND DUPLEX RECEPTACLE. |
| E | DENOTES EXISTING DEVICE TO REMAIN |
| ER | DENOTES EXISTING DEVICE TO BE REMOVED. REMOVE CONDUIT AND WIRE BACK TO SOURCE. |
| RM | DENOTES ROOF MOUNTED |
| CK | DENOTES CLOCK STYLE RECEPTACLE |
| CL | DENOTES CEILING MOUNTED |
| WP | DENOTES NEMA TYPE 4X ENCLOSURE SUITABLE FOR HOSE DIRECTED WATER |
| WG | DENOTES DEVICE COMPLETE WITH PROTECTIVE WIRE GUARD |
| W | DENOTES MOUNTING HEIGHT TO BE IN LINE WITH LIGHT SWITCHES. |
| S | DENOTES SURFACE MOUNTED |
| MW | DENOTES MOUNTED IN MILLWORK |
| | 4" SQUARE BACKBOX C/W SINGLE DEVICE COVER (PLASTER RING) AND 3/4" EMPTY ZONE CONDUIT ASSEMBLY FOR COMMUNICATIONS CONTRACTOR'S USE. PROVIDE A PULL STRING IN CONDUIT. |
| DE | 2–GANG DEEP BACKBOX C/W COVER PLATE AND 3/4" EMPTY ZONE CONDUIT ASSEMBLY TO COMPRESSOR ROOM/O&N CLOSET C/W PULLSTRING FOR DENTAL EQUIPMENT CONTRACTOR'S USE. |
| AV | 4" SQUARE DEEP BACKBOX C/W COVER PLATE AND 1 1/2" ZONE CONDUIT SYSTEM C/W PULLSTRING FOR A/V CONTRACTOR'S USE. |
| TV | 4" SQUARE DEEP BACKBOX C/W COVER PLATE AND 1 1/2" ZONE CONDUIT SYSTEM C/W PULLSTRING FOR A/V CONTRACTOR'S USE. |
| (A) | WALL MOUNTED OFFICE GROUP CONSISTING OF ONE (1) DUPLEX RECEPTACLE, ONE (1) PLUG LOAD CONTROLLED DUPLEX RECEPTACLE AND 4" SQUARE BACKBOX C/W SINGLE DEVICE COVER (PLASTER RING) WITH 3/4" ZONE CONDUIT C/W PULL STRING FOR COMMUNICATIONS CONTRACTOR'S USE. |
| (B) | WALL MOUNTED OFFICE GROUP CONSISTING OF TWO (2) DUPLEX RECEPTACLES AND 4" SQUARE BACKBOX C/W SINGLE DEVICE COVER (PLASTER RING) WITH 3/4" ZONE CONDUIT C/W PULL STRING FOR COMMUNICATIONS CONTRACTOR'S USE. |

| | |
|---|---|
| (C) | WALL MOUNTED OFFICE GROUP CONSISTING OF ONE (1) HOSPITAL GRADE DUPLEX RECEPTACLE AND 4" SQUARE BACKBOX C/W SINGLE DEVICE COVER (PLASTER RING) WITH 3/4" ZONE CONDUIT C/W PULL STRING FOR COMMUNICATIONS CONTRACTOR'S USE. |
| A F | FLOOR MOUNTED OFFICE GROUP CONSISTING OF ONE (1) DUPLEX RECEPTACLE, ONE (1) PLUG LOAD CONTROLLED DUPLEX RECEPTACLE AND CUTOUTS FOR COMMUNICATIONS CONTRACTOR'S USE. 'F' DENOTES RECESSED MOUNTED. |
| F | RECESSED MOUNTED OFFICE GROUP CONSISTING OF CUTOUTS FOR A/V CONTRACTOR'S USE. |
| | DENOTES LOCATION OF COLUMN/WALL MOUNTED CABLE ENTRY FOR SYSTEMS FURNITURE. PROVIDE ELECTRICAL REQUIREMENTS AND COMMUNICATIONS ROUGH–IN REQUIREMENTS. |
| | DENOTES LOCATION OF FLOOR MOUNTED CABLE ENTRY FOR SYSTEMS FURNITURE. PROVIDE ELECTRICAL REQUIREMENTS AND COMMUNICATIONS ROUGH–IN REQUIREMENTS. |
| CHAIR | DENOTES LOCATION OF FLOOR MOUNTED CABLE ENTRY. PROVIDE ELECTRICAL REQUIREMENTS AND COMMUNICATIONS ROUGH–IN REQUIREMENTS. 'CHAIR' DENOTES CONDUIT STUBBED UP INTO DENTAL CHAIR BASE. |
| | SMOKE DETECTOR. CONNECT TO BASE BUILDING FIRE ALARM SYSTEM. |
| | HEAT DETECTOR. CONNECT TO BASE BUILDING FIRE ALARM SYSTEM. |
| | MANUAL PULL STATION. CONNECT TO BASE BUILDING FIRE ALARM SYSTEM. |
| G | 6" FIRE ALARM SYSTEM BELL. CONNECT TO BASE BUILDING FIRE ALARM SYSTEM. 'G' DENOTES RECESS (WALL/CEILING) MOUNTED BACKBOX C/W FIELD PAINTABLE GRILL. |
| H | FIRE ALARM SYSTEM STROBE LIGHT. CONNECT TO BASE BUILDING FIRE ALARM SYSTEM. WHITE IN COLOUR. |
| I | ISOLATION MODULE. CONNECT TO BASE BUILDING FIRE ALARM SYSTEM. |
| EOL | END OF LINE RESISTOR. CONNECT TO BASE BUILDING FIRE ALARM SYSTEM. |
| M | INITIATING DEVICE INTERFACE ZONE MODULE. CONNECT TO BASE BUILDING FIRE ALARM SYSTEM. |
| C FA | CONTROL ZONE MODULE. CONNECT TO BASE BUILDING FIRE ALARM SYSTEM. |
| CR | CARD READER. CONNECT TO ACCESS CONTROL SYSTEM. |
| ES | ELECTRIC STRIKE. CONNECT TO ACCESS CONTROL SYSTEM. |
| H | AUDIBLE ALARM. CONNECT TO ACCESS CONTROL SYSTEM. |
| DR | DOOR RELEASE. CONNECT TO ACCESS CONTROL SYSTEM. |
| MD | MOTION DETECTOR REQUEST TO EXIT. CONNECT TO ACCESS CONTROL SYSTEM. |
| DS | UNIVERSAL WASHROOM DURESS SYSTEM CIRCUIT ACCESS CONTROL SYSTEM INTERFACE C/W CONDUIT AND WIRE. |
| HP | BARRIER FREE WAVE SENSOR ROUGH–IN C/W CONDUIT AND WIRE. |
| INT | DOOR OPERATOR INTERFACE DEVICE. CONNECT TO ACCESS CONTROL SYSTEM. |
| MS A | ROOM CEILING MOUNTED OCCUPANCY SENSOR WATT STOPPER LMDC–100 OR APPROVED EQUAL. SENSOR PRESET AT 20 MINUTE TIME OUT SETTING C/W MANUAL ON AND AUTO OFF AND DEFAULT DETECTION TECHNOLOGY SETTING. |
| MS B | OPEN OFFICE AREA CEILING MOUNTED OCCUPANCY SENSOR WATT STOPPER LMDC–100 OR APPROVED EQUAL. SENSOR PRESET AT 20 MINUTE TIME OUT SETTING C/W MANUAL ON AND AUTO OFF AND DEFAULT DETECTION TECHNOLOGY SETTING. |
| MS C | NON–SWITCHED CORRIDOR CEILING MOUNTED OCCUPANCY SENSOR WATT STOPPER LMDC–100 OR APPROVED EQUAL. SENSOR PRESET AT 20 MINUTE TIME OUT SETTING C/W AUTO ON AND AUTO OFF WALK THROUGH MODE ON AND DEFAULT SETTING. |
| MS G | EQUIPMENT ROOM MOUNTED OCCUPANCY SENSOR WATT STOPPER LMPC–100 OR APPROVED EQUAL. SENSOR PRESET AT 20 MINUTE TIME OUT SETTING C/W AUTO ON AND AUTO OFF AND DEFAULT DETECTION TECHNOLOGY SETTING. |
| RA | DIGITAL ON/OFF/DIMMING ROOM CONTROLLER WATT STOPPER LMRC–212/LMRC–212–347 OR APPROVED EQUAL (VOLTAGE RATING AS REQUIRED TO SUIT LIGHTING LOAD). |
| RA L | DIGITAL DIMMING ROOM CONTROLLER WATT STOPPER 120V LINE VOLTAGE LMRC–222 OR APPROVED EQUAL. |
| PL | DIGITAL PLUG LOAD CONTROLLER WATT STOPPER LMPL–101 OR APPROVED EQUAL. |
| PS P 1 | CEILING MOUNTED PHOTOSENSOR WATT STOPPER LMLS–400 OR APPROVED EQUAL. SENSOR PRESET 35FC. 'P' DENOTES PRIMARY SIDE LIGHTED AREA. 'S' DENOTES SECONDARY SIDE LIGHTED AREA. |
| DC | HARDWIRED INTRUSION SYSTEM DOOR CONTACT. CONNECT TO INTRUSION SYSTEM |
| KP | HARDWIRED INTRUSION SYSTEM KEYPAD. CONNECT TO INTRUSION SYSTEM. |
| GB | INTRUSION SYSTEM HARDWIRED GLASS BREAK DETECTOR. CONNECT TO INTRUSION SYSTEM. |
| MS | HARDWIRED INTRUSION SYSTEM MOTION SENSOR. CONNECT TO INTRUSION SYSTEM. |
| D | UNIVERSAL WASHROOM DURESS SYSTEM COMBINATION STROBE LIGHT/HORN |
| DB | UNIVERSAL WASHROOM DURESS SYSTEM STATION |
| CCTV CX | VANDAL RESISTANT CCTV DOME CAMERA C/W MOUNTING BRACKETS, 'CX' DENOTES CAMERA DESIGNATION. |
| TH | THERMOSTAT SUPPLIED BY MECHANICAL CONTRACTOR AND INSTALLED BY ELECTRICAL CONTRACTOR. PROVIDE CONDUIT AND WIRE. |
| DS | DURESS SYSTEM STROBE LIGHT. CONNECT TO INTRUSION SYSTEM |
| PB | DURESS SYSTEM PANIC BUTTON. CONNECT TO INTRUSION SYSTEM |
| VM | INTERCOM SYSTEM MASTER STATION |
| IN V | INTERCOM SYSTEM DOOR STATION. 'V' DENOTES VIDEO DOOR STATION, 'A' DENOTES AUDIO DOOR STATION. |

1. SUBSTITUTES ARE NOT PERMITTED FOR ALL SPECIFIED PRODUCTS.
2. SHOP DRAWINGS ARE REQUIRED FOR ALL PRODUCTS SPECIFIED FOR THIS PROJECT INCLUDING BUT NOT LIMITED TO LIGHTING CONTROL, ELECTRICAL DISTRIBUTION, RECEPTACLE PANELS, CABLE TRAYS, LIGHTING FIXTURES, EXIT SIGNS, SWITCHES, RECEPTACLES, COVER PLATES, DIMMERS, FLOOR BOXES, CCTV SYSTEM, INTERCOM SYSTEM, ACCESS CONTROL SYSTEM, INTRUSION SYSTEM, FIRE ALARM SYSTEM DEVICES AND GROUNDING SYSTEM MATERIALS.
3. ELECTRICAL CONTRACTOR AND ALL SUBCONTRACTORS MUST READ AND COMPLY WITH ELECTRICAL SPECIFICATIONS (ISSUED AS A SEPARATE DOCUMENT).
4. CIRCUITING MUST BE COMPLETED AS SHOWN ON DRAWINGS. DO NOT CHANGE CIRCUIT NUMBERS.
5. INSTALLATION AND MANUFACTURING OF ALL DEVICES AND SERVICES INCLUDING DISTRIBUTION, LIGHT FIXTURES, FEEDERS, BRANCH CIRCUITS, VARIOUS SYSTEMS, ETC. MUST COMPLY WITH ALL LOCAL SEISMIC RESTRAINT REQUIREMENTS.
6. THESE DRAWINGS SHALL BE READ IN CONJUNCTION WITH THE ARCHITECTURAL DRAWINGS FOR DIMENSIONS, MOUNTING HEIGHTS, CONSTRUCTION DETAILS, LOCATION OF LIGHT FIXTURES, FINISHES AND COLOURS.
7. AS PART OF THIS SCOPE OF WORK AND PRIOR TO CONSTRUCTION, ELECTRICAL CONTRACTOR SHALL COORDINATE AND PAY FOR THE SERVICES OF THE FIRE ALARM MANUFACTURER, FIRE INSPECTOR AND BUILDING INSPECTOR TO THOROUGHLY REVIEW THE PROPOSED INSTALLATION LOCATIONS FOR EACH AND EVERY CONTROL PANEL, REMOTE ANNUNCIATOR PANEL, ANCILLARY DEVICE, FIELD DEVICE, ETC TO ENSURE THAT THE PROPOSED INSTALLATION IS FULLY COMPLIANT WITH CAN/ULC S524–14–AMD1 AND ONTARIO BUILDING CODE. COMPLIANCE SHALL INCLUDE INTERFERENCE AND PROXIMITY TO NEW AND EXISTING DEVICES AND OBSTRUCTIONS (INCLUDING BUT NOT LIMITED TO LIGHT FIXTURES, SUPPLY AIR DUCTS, EXPOSED DUCT WORK, BEAMS, RACEWAYS, ETC), SPACING BETWEEN FIELD DEVICES PROVIDED AS PART OF THIS SCOPE OF WORK IN PROPOSED INSTALLATION LOCATIONS, ETC.
8. AS PART OF THIS SCOPE OF WORK AND PRIOR TO CONSTRUCTION, ELECTRICAL CONTRACTOR SHALL COORDINATE AND PAY FOR THE SERVICES OF THE BUILDING INSPECTOR TO REVIEW THE PROPOSED EXIT SIGN ORIENTATIONS, LOCATIONS, FACES (READ OR PICTOGRAM) AND CHEVRONS.
9. AS PART OF THE BASE BID PRICE ELECTRICAL CONTRACTOR SHALL PROVIDE A FIRE WATCH THROUGHOUT THE DURATION OF THE PROJECT.
10. FIRE ALARM SYSTEM TESTING AND VERIFICATIONS MUST TAKE PLACE BETWEEN 11PM AND 5AM DURING THE WEEK.
11. AS BUILT DRAWING REQUIREMENTS:
    AS BUILT DRAWINGS TO BE PREPARED AND SUBMITTED IN AUTOCAD FORMAT BY THE ELECTRICAL CONTRACTOR.
    - ALL DEMOLITION SCOPES OF WORK ARE TO BE ERASED FROM AS BUILT DRAWINGS.
    - ROUTING OF ALL FEEDERS, BRANCH WIRING (LIGHTING, EMERGENCY LIGHTING, POWER, ETC), LOW VOLTAGE WIRING, MISCELLANEOUS SYSTEMS WIRING, MISCELLANEOUS CONDUIT SYSTEMS, ETC, TO BE SHOWN ON AS BUILT DRAWINGS.

    REFER TO DRAWINGS AND SPECIFICATIONS FOR ADDITIONAL REQUIREMENTS.
12. ALL SCOPES OF WORK REQUIRED TO BE COMPLETED IN OCCUPIED AREAS OF THE FACILITY INCLUDING WORK RELATED TO DEFICIENCIES MUST BE COMPLETED BETWEEN 11PM AND 5AM DURING THE WEEK. REMOVAL AND REINSTALLATION OF CEILING TILES TO ACCOMMODATE ALL SCOPES OF WORK SHALL BE PROVIDED BY THE ELECTRICAL CONTRACTOR.
13. PROVIDE A DEDICATED GREEN INSULATED COPPER GROUND WIRE FOR EACH RECEPTACLE, DEVICE, LIGHT SWITCH, ETC. IN PATIENT CARE AREAS, OPERATORIES, ETC.
14. AS PART OF THIS SCOPE OF WORK SET UP ACCESS CONTROL SYSTEM KEY CARDS PROVIDED AS PART OF THIS SCOPE OF WORK, INCLUDING TAKING EMPLOYEE PHOTOS AND SETTING UP AND PROGRAMING NEW DATABASE PROVIDED AS PART OF THIS SCOPE OF WORK. ELECTRICAL CONTRACTOR SHALL COORDINATE, ORGANIZE AND SCHEDULE TIME TO TAKE PHOTOS OF ALL STAFF AT THE SITE. PROVIDE A BLUE CURTAIN BACKDROP, ALL REQUIRED LIGHTING AND ALL OTHER EQUIPMENT REQUIRED FOR PHOTO TAKING. REFER TO DRAWING NO. E–017 FOR ADDITIONAL REQUIREMENTS.
15. ALL PANEL SCHEDULE DIRECTORIES MUST BE UPDATED WITH TYPEWRITTEN PANEL SCHEDULES. KROY TAPE MUST BE USED FOR ALL LABELING AT ALL OUTLETS AND LAMACOIDS FOR ENCLOSURES.
16. THE CONTRACTOR MUST ENSURE THAT FIRESTOPPING AND SEALANTS ARE INSTALLED AT NEW FLOOR OPENINGS IN ACCORDANCE WITH THE CURRENT FIRE CODE REQUIREMENTS AND TO PREVENT WATER LEAKAGE TO THE FLOORS BELOW. AREAS PRONE TO WATER LEAKAGE ARE TO BE WATERPROOFED PRIOR TO INSTALLATION OF THE TENANT FLOOR COVERINGS. THE LANDLORD WILL APPROVE THE PROPOSED WATERPROOFING METHOD PRIOR TO THE TENANT PROCEEDING WITH CONSTRUCTION.
17. ALL DENTAL EQUIPMENT SHALL BE INSTALLED AT THE END OF THE CONSTRUCTION AFTER SITE CLEAN UP. AS PART OF THIS SCOPE OF WORK ELECTRICAL CONTRACTOR SHALL COORDINATE AND SCHEDULE TIME TO COMPLETE FINAL ELECTRICAL CONNECTIONS TO DENTAL EQUIPMENT, BUCK & BOOST TRANSFORMERS, ETC., WITH PROJECT MANAGER.

ALL MEASUREMENTS ARE TO BE VERIFIED BY THE CONTRACTOR ON SITE AND ANY DISCREPANCIES ARE TO BE REPORTED BEFORE PROCEEDING WITH THE WORK. THE REGION OF DURHAM ASSUMES NO RESPONSIBILITY FOR THE ACCURACY OF THE LOCATION OF EXISTING SERVICES AS INDICATED ON THIS DRAWING. DO NOT SCALE DRAWINGS.

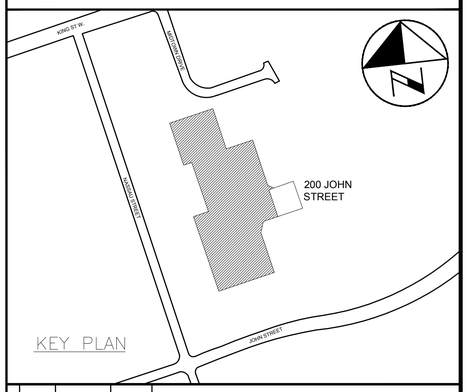


CONSULTANT REVISIONS

| NO. | DATE | NAME | REVISIONS |
|---|---|---|---|
| | | | |
| | | | |
| | | | |
| | | | |
| | | | |
| | | | |
| | | | |
| | | | |

PRIME CONSULTANT

BARRY BRYAN ASSOCIATES
Architects
Engineers
Project Managers
250 Water St.
Suite 201
Whitby, Ontario
L1N 0G5
Tel: (905) 666-5252
Fax: (905) 666-5256
e-mail: bba@bba-archeng.com

LICENSED PROFESSIONAL ENGINEER
H.D. COHEN
90414335
FEB09/2021
PROVINCE OF ONTARIO

SUB–CONSULTANT

HCC ENGINEERING
DESIGN AND TECHNOLOGY SERVICES GROUP
HCC ENGINEERING LIMITED
40 EGLINTON AVENUE EAST, SUITE 600
TORONTO, ONTARIO, M4P 3A2
Tel: (416) 932–2423

LICENSED PROFESSIONAL ENGINEER
X.P. CHEN
100219955
FEB09/2021
PROVINCE OF ONTARIO

HCC Project No.: 20104

| | |
|---|---|
| DESIGN BY: PC | SCALE AS SHOWN |
| DRAWN BY: TLR | DATE: 2020–05–01 |
| CHECKED BY: PC/HDC | CONSULTANT PROJECT NO. 20060 |
| APPROVED BY: HDC | |

CONTRACT REVISIONS

| NO. | DATE | NAME | REVISIONS |
|---|---|---|---|
| | | | |
| | | | |
| | | | |
| | | | |
| | | | |
| 3 | FEB09/2021 | HCC | ISSUED FOR PERMIT & TENDER |
| 2 | OCT30/2020 | HCC | ISSUED FOR 90% REVIEW |
| 1 | MAY15/2020 | HCC | ISSUED FOR 60% REVIEW |

DURHAM REGION

THE REGIONAL MUNICIPALITY OF DURHAM
WORKS DEPARTMENT
DESIGN, CONSTRUCTION & ASSET MANAGEMENT

# RELOCATION OF DENTAL CLINIC TO 200 JOHN ST., OSHAWA

## ELECTRICAL LEGEND AND DETAILS

| PROPERTY NO. | FACILITY CODE | FACILITIES PROJECT NO. |
|---|---|---|
| N/A | LEA–0–07 | LEA–0–07–19–01 |
| CONTRACT NO. | DRAWING NO. | SHEET NO. |
| T–1032–2021 | E–001 | 034 |

F:\Projects 2020\20104\E-001F.dwg

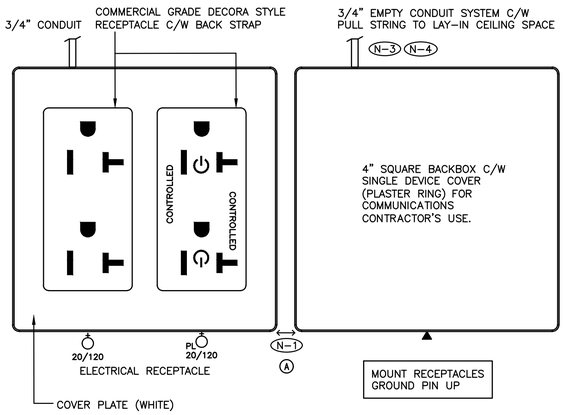


N-1 MINIMUM CLEARANCE.

N-2 NEATLY LABEL ALL FLOOR MOUNTED AND WALL DEVICE BOX COVERS WITH CORRESPONDING PANEL NAMES AND CIRCUIT NUMBERS, UTILIZE SELF ADHESIVE MECHANICALLY PRINTED LABELS.

N-3 PROVIDE PUNCH OUTS IN BACKBOX TO ACCOMMODATE CONDUITS INDICATED.

N-4 TERMINATE CONDUIT WITH A 90 DEGREE BEND AND PLASTIC BUSHING IN THE ACCESSIBLE CEILING SPACE.

UTILITY CCT – WHITE RECEPTACLE

1 E-002 TYPICAL TYPE 'A' OFFICE GROUP DETAIL
SCALE: NTS

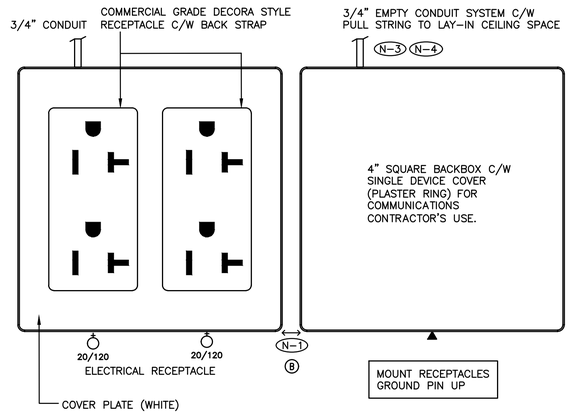


N-1 MINIMUM CLEARANCE.

N-2 NEATLY LABEL ALL FLOOR MOUNTED AND WALL DEVICE BOX COVERS WITH CORRESPONDING PANEL NAMES AND CIRCUIT NUMBERS, UTILIZE SELF ADHESIVE MECHANICALLY PRINTED LABELS.

N-3 PROVIDE PUNCH OUTS IN BACKBOX TO ACCOMMODATE CONDUITS INDICATED.

N-4 TERMINATE CONDUIT WITH A 90 DEGREE BEND AND PLASTIC BUSHING IN THE ACCESSIBLE CEILING SPACE.

UTILITY CCT – WHITE RECEPTACLE

2 E-002 TYPICAL TYPE 'B' OFFICE GROUP DETAIL
SCALE: NTS

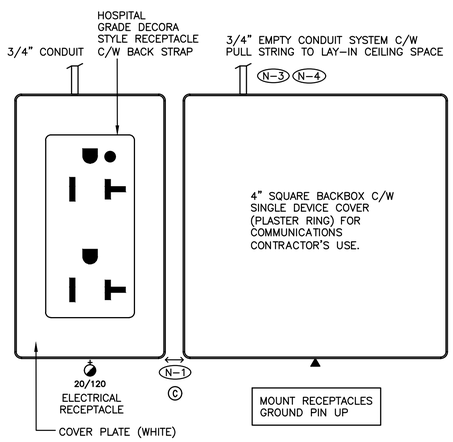


N-1 MINIMUM CLEARANCE.

N-2 NEATLY LABEL ALL FLOOR MOUNTED AND WALL DEVICE BOX COVERS WITH CORRESPONDING PANEL NAMES AND CIRCUIT NUMBERS, UTILIZE SELF ADHESIVE MECHANICALLY PRINTED LABELS.

N-3 PROVIDE PUNCH OUTS IN BACKBOX TO ACCOMMODATE CONDUITS INDICATED.

N-4 TERMINATE CONDUIT WITH A 90 DEGREE BEND AND PLASTIC BUSHING IN THE ACCESSIBLE CEILING SPACE.

UTILITY CCT – WHITE RECEPTACLE

3 E-002 TYPICAL TYPE 'C' OFFICE GROUP DETAIL
SCALE: NTS

ALL MEASUREMENTS ARE TO BE VERIFIED BY THE CONTRACTOR ON SITE AND ANY DISCREPANCIES ARE TO BE REPORTED BEFORE PROCEEDING WITH THE WORK. THE REGION OF DURHAM ASSUMES NO RESPONSIBILITY FOR THE ACCURACY OF THE LOCATION OF EXISTING SERVICES AS INDICATED ON THIS DRAWING. DO NOT SCALE DRAWINGS.

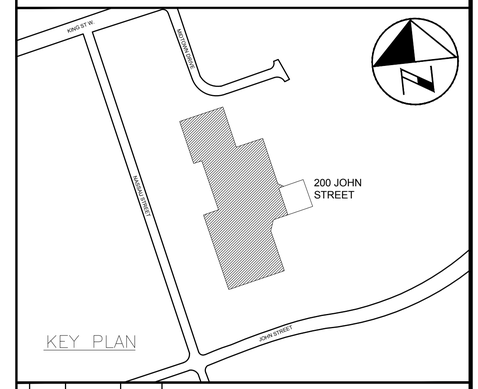


CONSULTANT REVISIONS

| NO. | DATE | NAME | REVISIONS |
|---|---|---|---|

PRIME CONSULTANT

BARRY BRYAN ASSOCIATES
Architects
Engineers
Project Managers
250 Water St.
Suite 201
Whitby, Ontario
L1N 0G6
Tel: (905) 666-5252
Fax: (905) 666-5256
e-mail: bba@bba-archeng.com

LICENSED PROFESSIONAL ENGINEER H.D. COHEN 90414335 FEB09/2021 PROVINCE OF ONTARIO

SUB-CONSULTANT

HCC ENGINEERING
DESIGN AND TECHNOLOGY SERVICES GROUP
HCC ENGINEERING LIMITED
40 EGLINTON AVENUE EAST, SUITE 600
TORONTO, ONTARIO, M4P 3A2
Tel: (416) 932-2423

LICENSED PROFESSIONAL ENGINEER X.P. CHEN 100219555 FEB09/2021 PROVINCE OF ONTARIO

HCC Project No.: 20104

| | | | |
|---|---|---|---|
| DESIGN BY: | PC | SCALE | AS SHOWN |
| DRAWN BY: | TLR | DATE: | 2020-05-01 |
| CHECKED BY: | PC/HDC | CONSULTANT PROJECT NO. | 20060 |
| APPROVED BY: | HDC | | |

CONTRACT REVISIONS

| NO. | DATE | NAME | REVISIONS |
|---|---|---|---|
| 3 | FEB09/2021 | HCC | ISSUED FOR PERMIT & TENDER |
| 2 | OCT30/2020 | HCC | ISSUED FOR 90% REVIEW |
| 1 | JUNE 1/20 | HCC | ISSUED FOR 60% REVIEW |

THE REGIONAL MUNICIPALITY OF DURHAM
WORKS DEPARTMENT
DESIGN, CONSTRUCTION & ASSET MANAGEMENT

# RELOCATION OF DENTAL CLINIC TO 200 JOHN ST., OSHAWA

## ELECTRICAL DETAILS

| PROPERTY NO. | FACILITY CODE | FACILITIES PROJECT NO. |
|---|---|---|
| N/A | LEA-O-07 | LEA-O-07-19-01 |
| CONTRACT NO. | DRAWING NO. | SHEET NO. |
| T-1032-2021 | E-002 | 035 |

F:\Projects 2020\20104\E-002C.dwg

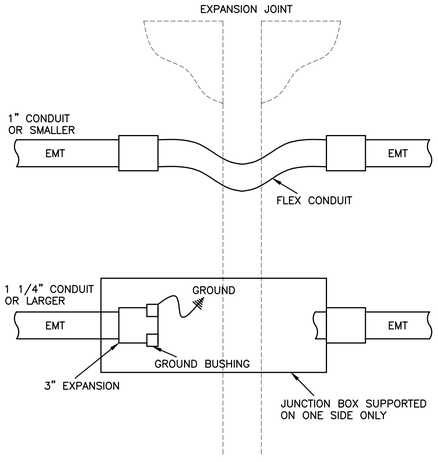


4 E-002 EXPANSION JOINT CROSSING DETAIL
SCALE: NTS

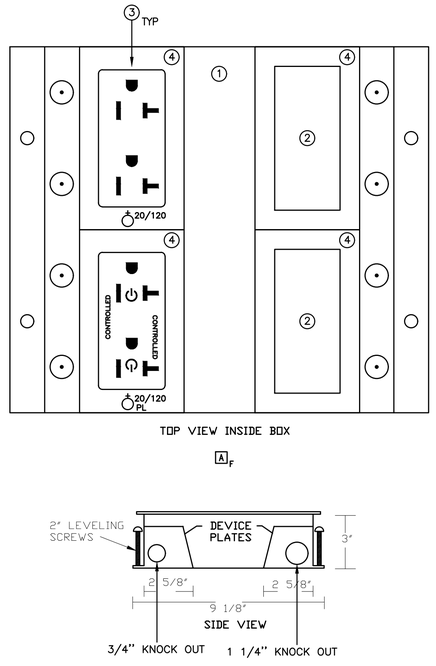


N-1 LID FINISH SHALL BE SEMI-GLOSS BLACK EPOXY POWDER.

N-2 NEATLY LABEL ALL FLOOR MOUNTED AND WALL DEVICE BOX COVERS WITH CORRESPONDING PANEL NAMES AND CIRCUIT NUMBERS, UTILIZE SELF ADHESIVE MECHANICALLY PRINTED LABELS.

UTILITY CCT – WHITE RECEPTACLE

1. FLUSH MOUNTED FLOOR BOX MODEL 400 AS MANUFACTURED BY WELLMARK C/W CARPET RECESSED LID
2. SPACE FOR COMMUNICATIONS CONTRACTOR'S USE
3. DECORA STYLE RECEPTACLE
4. DECORA STYLE COVERPLATE

CONFIRM SLAB THICKNESS PRIOR TO RELEASING FLOOR BOX FOR MANUFACTURING

5 E-002 RECESSED FLOOR MOUNTED TYPE 'A' OFFICE GROUP OUTLET DETAIL
SCALE: NTS

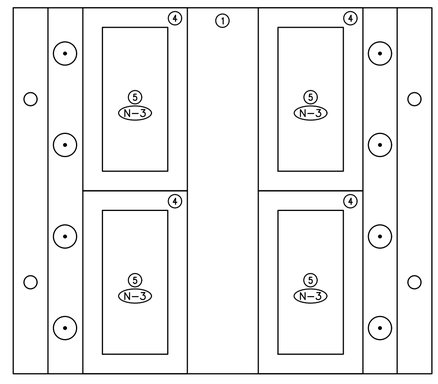


1. FLUSH MOUNTED FLOOR BOX MODEL 400 AS MANUFACTURED BY WELLMARK C/W CARPET RECESSED LID
2. NOT USED
3. NOT USED
4. DECORA STYLE COVERPLATE
5. INSERT C/W CUTOUT FOR VGA OUTLET AND AUDIO OUTLET FOR A/V CONTRACTOR'S USE

CONFIRM SLAB THICKNESS PRIOR TO RELEASING FLOOR BOX FOR MANUFACTURING

N-1 LID FINISH SHALL BE SEMI-GLOSS BLACK EPOXY POWDER.

N-2 NEATLY LABEL ALL FLOOR MOUNTED AND WALL DEVICE BOX COVERS WITH CORRESPONDING PANEL NAMES AND CIRCUIT NUMBERS, UTILIZE SELF ADHESIVE MECHANICALLY PRINTED LABELS.

N-3 INSERT C/W CUTOUTS FOR A/V OUTLETS PROVIDED AS PART OF THIS SCOPE OF WORK. TEMPLATE TO BE PROVIDED BY A/V CONTRACTOR DURING CONSTRUCTION.

6 E-002 TYPICAL RECESSED FLOOR MOUNTED TYPE 'F' OFFICE GROUP OUTLET DETAIL
SCALE: NTS

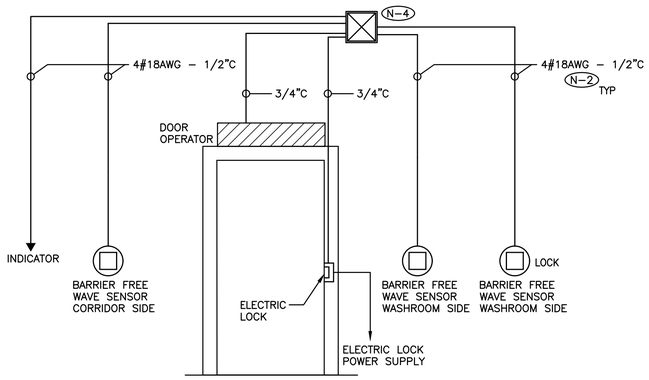


N–1 ROUGH–IN DETAILS ARE DIAGRAMMATIC.

N–2 PROVIDE WIRE, CONDUIT AND BACKBOXES INDICATED.

N–3 COORDINATE THE ROUGH–IN REQUIREMENT WITH DOOR MANUFACTURER AND DOOR OPERATOR CONTRACTOR PRIOR TO CONSTRUCTION.

N–4 PULLBOX INDICATED MUST BE LOCATED AT THE SECURED SIDE OF THE DOOR. MINIMUM PULLBOX SIZE 12" X 12".

1 E–003 ELECTRONIC DOOR LOCK ROUGH–IN DETAIL
SCALE: NTS

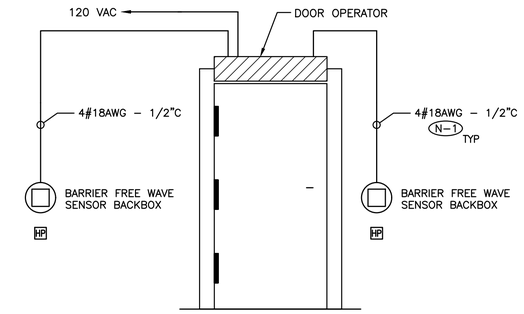


N–1 PROVIDE WIRE, CONDUIT AND BACKBOXES INDICATED.

N–2 COORDINATE THE ROUGH–IN REQUIREMENT WITH DOOR MANUFACTURER PRIOR TO CONSTRUCTION.

2 E–003 BARRIER FREE DOOR OPERATOR SYSTEM DETAIL
SCALE: NTS

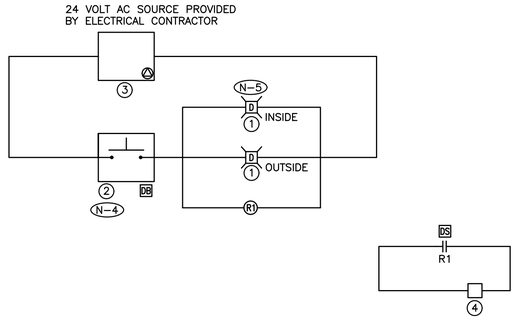


N–1 SCHEMATIC IS DIAGRAMMATIC ONLY. REFER TO FLOOR PLANS FOR LOCATION AND QUANTITY OF DEVICES.

N–2 PROVIDE WIRING, CONTACTORS AND DUAL VOLTAGE RELAYS (DVR'S) AS REQUIRED FOR A FULLY OPERATIONAL SYSTEM.

N–3 ALL LOW VOLTAGE WIRING TO BE ENCLOSED IN A CONDUIT SYSTEM.

N–4 PROVIDE EDWARDS SIGN–EMERG–PUSH SIGNAGE PER OBC ABOVE THE DURESS SYSTEM STATION.

N–5 WIRE THE APPLIANCE INDICATED FOR VISUAL ALARM ONLY.

N–6 PROVIDE DEDICATED CORE DRILLED WALL PENETRATIONS ON EVERY FLOOR. EXACT LOCATION OF ALL CORE DRILLS TO BE DETERMINED BY X–RAY RESULTS. ALL X–RAYS MUST BE REVIEWED AND APPROVED BY LANDLORD PRIOR TO CORE DRILLING.

1 DURESS SYSTEM COMBINATION STROBE LIGHT/HORN – EDWARDS 6536–G5

2 DURESS SYSTEM STATION, PUSH BUTTON – EDWARDS SS–2001E C/W SUB–102722–R SPACER

3 TRANSFORMER – EDWARDS 592

4 SECURITY SYSTEM ACCESS CONTROL PANEL PROVIDED AS PART OF THIS SCOPE OF WORK

3 E–003 UNIVERSAL WASHROOM DURESS SYSTEM SCHEMATIC DIAGRAM
SCALE: NTS

ALL MEASUREMENTS ARE TO BE VERIFIED BY THE CONTRACTOR ON SITE AND ANY DISCREPANCIES ARE TO BE REPORTED BEFORE PROCEEDING WITH THE WORK. THE REGION OF DURHAM ASSUMES NO RESPONSIBILITY FOR THE ACCURACY OF THE LOCATION OF EXISTING SERVICES AS INDICATED ON THIS DRAWING. DO NOT SCALE DRAWINGS.

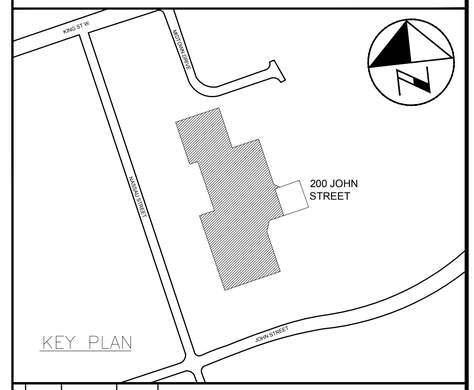


CONSULTANT REVISIONS

| NO. | DATE | NAME | REVISIONS |
|---|---|---|---|
| | | | |

PRIME CONSULTANT

BARRY BRYAN ASSOCIATES
Architects
Engineers
Project Managers
250 Water St.
Suite 201
Whitby, Ontario
L1N 0G5
Tel: (905) 666-5252
Fax: (905) 666-5256
e-mail: bba@bba-archeng.com

LICENSED PROFESSIONAL ENGINEER
H.D. COHEN
90414335
FEB09/2021
PROVINCE OF ONTARIO

SUB–CONSULTANT

HCC ENGINEERING
DESIGN AND TECHNOLOGY SERVICES GROUP
HCC ENGINEERING LIMITED
40 EGLINTON AVENUE EAST, SUITE 600
TORONTO, ONTARIO, M4P 3A2
Tel: (416) 932-2423

LICENSED PROFESSIONAL ENGINEER
X. P. CHEN
100219955
FEB09/2021
PROVINCE OF ONTARIO

HCC Project No.: 20104

| | |
|---|---|
| DESIGN BY: PC | SCALE AS SHOWN |
| DRAWN BY: TLR | DATE: 2020–05–01 |
| CHECKED BY: PC/HDC | CONSULTANT PROJECT NO. 20060 |
| APPROVED BY: HDC | |

CONTRACT REVISIONS

| NO. | DATE | NAME | REVISIONS |
|---|---|---|---|
| 3 | FEB09/2021 | HCC | ISSUED FOR PERMIT & TENDER |
| 2 | OCT30/2020 | HCC | ISSUED FOR 90% REVIEW |
| 1 | JUNE 1/20 | HCC | ISSUED FOR 60% REVIEW |

THE REGIONAL MUNICIPALITY OF DURHAM
WORKS DEPARTMENT
DESIGN, CONSTRUCTION & ASSET MANAGEMENT

# RELOCATION OF DENTAL CLINIC TO 200 JOHN ST., OSHAWA

## ELECTRICAL DETAILS

| PROPERTY NO. | FACILITY CODE | FACILITIES PROJECT NO. |
|---|---|---|
| N/A | LEA–0–07 | LEA–0–07–19–01 |
| CONTRACT NO. | DRAWING NO. | SHEET NO. |
| T–1032–2021 | E–003 | 036 |

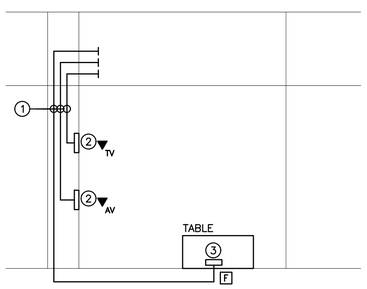


N–1 LOW VOLTAGE CABLES AND TERMINATIONS PROVIDED BY A/V CONTRACTOR.

N–2 PROVIDE NYLON INSULATED THROATS FOR ALL BUSHINGS AND CONNECTORS.

N–3 SAW CUTTING OF FLOOR SLAB PROVIDED BY ELECTRICAL CONTRACTOR. EXACT ROUTING TO BE DETERMINED BY SCANNING/X–RAY RESULTS. SUBMIT LAYOUT C/W CONDUIT SIZES TO ELECTRICAL CONSULTANT FOR APPROVAL PRIOR TO CUTTING OF FLOOR SLAB.

N–4 REFER TO DETAIL NO. 3 ON DRAWING NO. E–004 FOR ADDITIONAL CONDUIT REQUIREMENTS.

N–5 PROVIDE DEDICATED CORE DRILLED WALL PENETRATIONS ON EVERY FLOOR. EXACT LOCATION OF ALL CORE DRILLS TO BE DETERMINED BY X–RAY RESULTS. ALL X–RAYS MUST BE REVIEWED AND APPROVED BY LANDLORD PRIOR TO CORE DRILLING.

N–6 COORDINATE CONDUIT TERMINATION REQUIREMENTS ON SITE WITH A/V CONTRACTOR.

1 1 1/2" CONDUIT C/W PULL STRING

2 4" SQUARE WALL MOUNTED DEEP BACKBOX C/W WHITE COVERPLATE (PUNCHOUT AS DIRECTED ON SITE) FOR A/V CONTRACTOR'S USE

3 LOW PROFILE FLOOR BOX/RECESSED FLOOR MONUMENT/POKE THROUGH/CONDUIT STUB UP

4 E–003 PROJECTOR CONDUIT ROUGH–IN SYSTEM DETAIL
SCALE: NTS

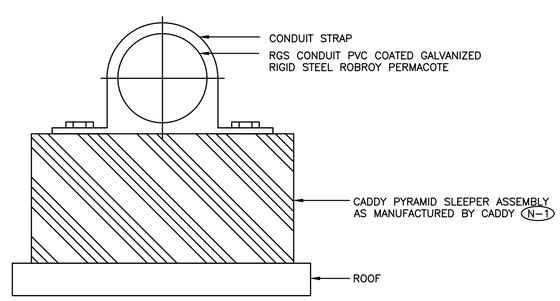


N–1 PROVIDE SLEEPERS AT 5' INTERVALS.

N–2 PROVIDE SECONDARY MEMBRANES AND FOAMS AS RECOMMENDED BY MANUFACTURER FOR SPECIFIC ROOF TYPES AND APPLICATIONS.

5 E–003 ROOFTOP CONDUIT MOUNTING DETAIL
SCALE: NTS

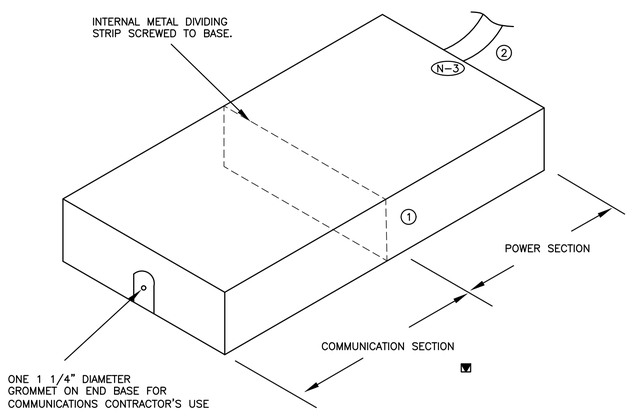


N–1 FINAL POWER CONNECTION TO FURNITURE PROVIDED BY ELECTRICAL CONTRACTOR.

N–2 NEATLY LABEL ALL FLOOR MOUNTED AND WALL DEVICE BOX COVERS WITH CORRESPONDING PANEL NAMES AND CIRCUIT NUMBERS, UTILIZE SELF ADHESIVE MECHANICALLY PRINTED LABELS.

N–3 PROVIDE OPENING OF ADEQUATE SIZE TO ACCEPT POWER HARNESS.

1 LOW PROFILE VIP FLOOR MONUMENT AS MANUFACTURED BY WELLMARK

2 FURNITURE POWER HARNESS PROVIDED BY FURNITURE MANUFACTURER

6 E–003 TYPICAL FURNITURE FEED MONUMENT
SCALE: NTS

F:\Projects 2020\20104\E–003E.dwg

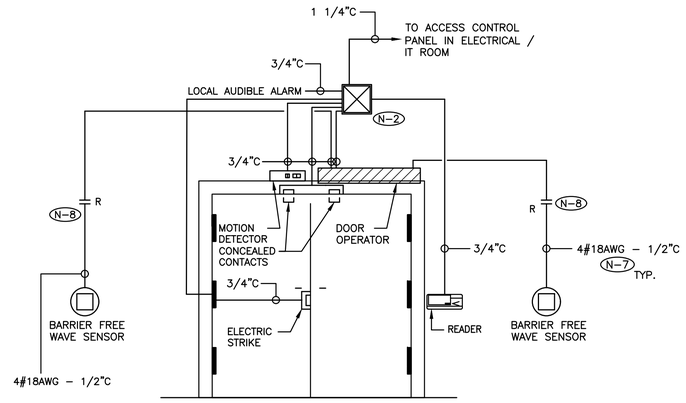


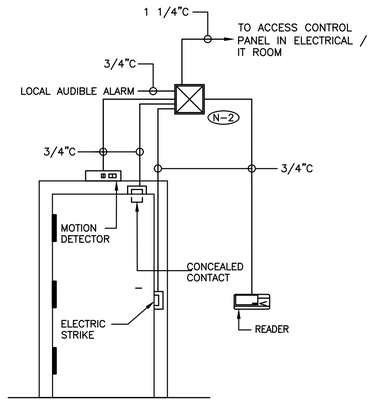


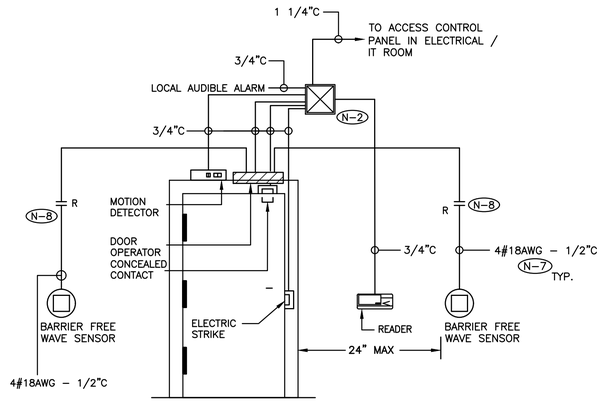


(N-1) ROUGH-IN DETAILS ARE DIAGRAMMATIC. REFER TO FLOOR PLANS FOR ADDITIONAL REQUIREMENTS, DEVICE QUANTITY AND LOCATION.

(N-2) PULLBOX INDICATED MUST BE LOCATED AT THE SECURED SIDE OF THE DOOR. MINIMUM PULLBOX SIZE 10" X 10" C/W FOUR (4) SECURITY SCREWS TYPE SNAKE EYES.

(N-3) ALL ZONE CONDUITS C/W PULL STRING.

(N-4) CONTACT SECURITY CONTRACTOR FOR EXACT LOCATION OF SECURITY SYSTEM CABINET, ADDITIONAL CONDUIT AND PULLBOX REQUIREMENTS AND FOR POWER REQUIREMENTS.

(N-5) ALL POWER AND CONDUIT WORK REQUIRED AND/OR SHOWN ON DRAWINGS RELATED TO SECURITY SYSTEM SHALL BE INCLUDED IN ELECTRICAL CONTRACTOR'S PRICE. CONTACT SECURITY CONTRACTOR FOR SPECIFIC REQUIREMENTS.

(N-6) NOT USED.

(N-7) EQUIP THE HANDICAP DOOR OPENER SYSTEM WITH A CONTROL CIRCUIT TO ALLOW FOR AUTOMATIC DOOR OPENING WHEN A CARD IS BADGED AT THE READER. DEPRESSING OF THE HANDICAP PUSH BUTTON WILL NOT BE REQUIRED.

(N-8) PROVIDE DOOR OPERATOR INTERFACE DEVICE TO PREVENT AUTOMATIC DOOR OPERATION WHILE THE ELECTRIC STRIKE IS ENERGIZED. REFER TO DETAIL NO. 2 ON DRAWING NO. E-004 FOR ADDITIONAL REQUIREMENTS.

1 / E-004 CARD ACCESS CONTROL SYSTEM ROUGH-IN DETAILS

SCALE: NTS

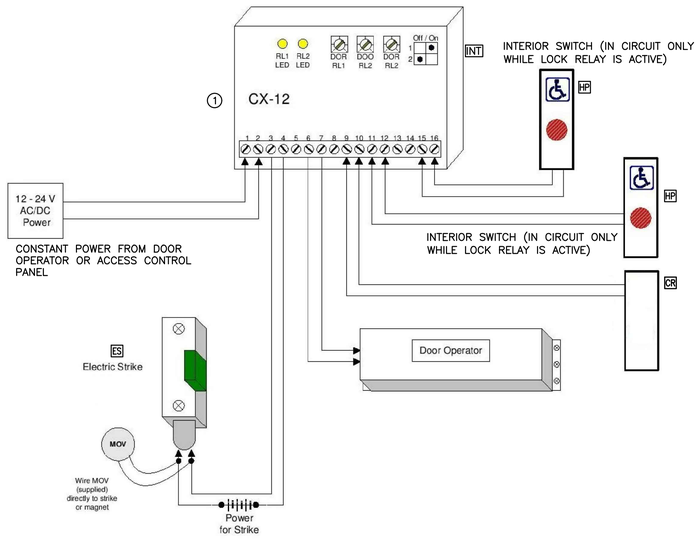


(N-1) SCHEMATIC IS DIAGRAMMATIC ONLY. PROVIDE QUANTITY OF INTERFACE DEVICES, HARDWARE, DEVICES, POWER CIRCUITS, CONDUIT, WIRE, SECURITY CABLES, ETC, TO ENSURE A FULLY OPERATIONAL SECURITY SYSTEM. REFER TO ROOM LAYOUTS AND FLOOR PLANS FOR ADDITIONAL REQUIREMENTS.

(N-2) PROVIDE CONDUITS AND WIRES IN ACCORDANCE WITH THE MANUFACTURER'S RECOMMENDATIONS.

(N-3) ALL CONDUITS TO BE EMT. EMT COUPLING AND CONNECTORS SHALL BE T&B STEEL, SET SCREW TYPE. PROVIDE SPARE PULLSTRING IN ALL CONDUITS FOR FUTURE USE.

(N-4) ELECTRICAL CONTRACTOR SHALL NOT USE PULLBOXES AS SUBSTITUTES FOR 90° BENDS. 12" X 12" X 6" PULLBOXES C/W TYPE SNAKE EYE SECURITY SCREWS SHALL BE PROVIDED ON THE BASIS OF NOT MORE THAN TWO (2) RIGHT ANGLE BENDS OR NOT MORE THAN 100' IN STRAIGHT RUNS BETWEEN BOXES.

(N-5) CONTACT SECURITY MANUFACTURER FOR ADDITIONAL WIRE, CONDUIT, PULLBOX AND POWER REQUIREMENTS OVER AND ABOVE THOSE SHOWN ON DRAWING.

(N-6) PROVIDE DEDICATED FLOOR AND WALL PENETRATIONS. EXACT LOCATION OF ALL CORE DRILLS TO BE DETERMINED BY X-RAY RESULTS. X-RAYS MUST BE REVIEWED AND APPROVED BY LANDLORD AND STRUCTURAL ENGINEER PRIOR TO CORE DRILLING.

(1) DOOR OPERATOR INTERFACE DEVICE – CAMDEN DOOR CONTROLS CX-12 SWITCHING NETWORK AND BI-DIRECTIONAL DOOR SEQUENCER

2 / E-004 DOOR OPERATOR INTERFACE SCHEMATIC

SCALE: NTS

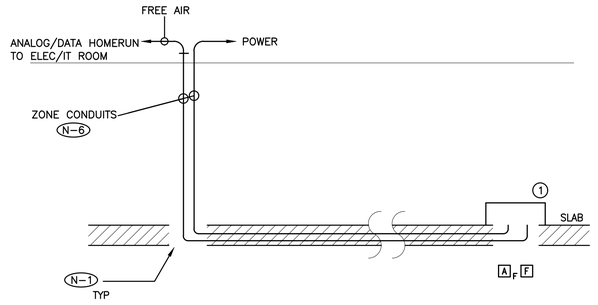


(N-1) SEAL OPENING AROUND CONDUITS.

(N-2) ALL CONDUITS PROVIDED FOR COMMUNICATIONS CONTRACTOR SHALL BE C/W PULLSTRING.

(N-3) SAW CUTTING OF FLOOR SLAB PROVIDED BY ELECTRICAL CONTRACTOR. EXACT ROUTING TO BE DETERMINED BY SCANNING/X-RAY RESULTS. SUBMIT LAYOUT C/W CONDUIT SIZES TO ELECTRICAL CONSULTANT FOR APPROVAL PRIOR TO CUTTING OF FLOOR SLAB.

(N-4) MINIMUM COMMUNICATIONS CONDUIT SIZE TO SERVICE EACH LOW PROFILE FLOOR BOX /RECESSED FLOOR MONUMENT/CONDUIT STUB UP/POKE THROUGH AS FOLLOWS:

A F 1 X 1 1/4"C

(N-5) REFER TO DETAIL NO. 4 ON DRAWING NO. E-003 FOR A/V CONDUIT REQUIREMENTS.

(N-6) ELECTRICAL CONTRACTOR TO CONFIRM TERMINATION REQUIREMENTS AND ROUTING WITH COMMUNICATIONS CONTRACTOR ON SITE PRIOR TO INSTALLATION OF ZONE CONDUITS.

(N-7) PROVIDE DEDICATED CORE DRILLED WALL PENETRATIONS ON EVERY FLOOR. EXACT LOCATION OF ALL CORE DRILLS TO BE DETERMINED BY X-RAY RESULTS. ALL X-RAYS MUST BE REVIEWED AND APPROVED BY LANDLORD PRIOR TO CORE DRILLING.

(1) LOW PROFILE FLOOR BOX/RECESSED FLOOR MONUMENT/CONDUIT STUB UP/POKE THROUGH

3 / E-004 SAW CUTTING FLOOR FEED SERVICES DETAIL

SCALE: NTS

ALL MEASUREMENTS ARE TO BE VERIFIED BY THE CONTRACTOR ON SITE AND ANY DISCREPANCIES ARE TO BE REPORTED BEFORE PROCEEDING WITH THE WORK. THE REGION OF DURHAM ASSUMES NO RESPONSIBILITY FOR THE ACCURACY OF THE LOCATION OF EXISTING SERVICES AS INDICATED ON THIS DRAWING. DO NOT SCALE DRAWINGS.

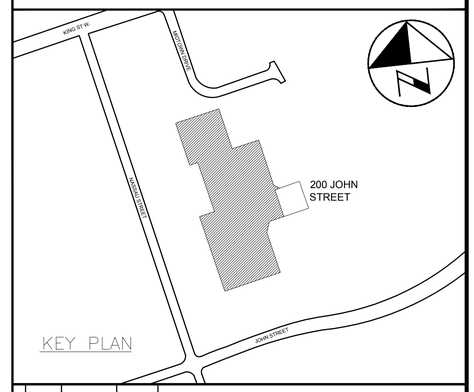


CONSULTANT REVISIONS

| NO. | DATE | NAME | REVISIONS |
|---|---|---|---|
| | | | |
| | | | |
| | | | |
| | | | |
| | | | |
| | | | |
| | | | |
| | | | |

PRIME CONSULTANT

BARRY BRYAN ASSOCIATES
Architects
Engineers
Project Managers
250 Water St.
Suite 201
Whitby, Ontario
L1N 0G5
Tel: (905) 666-5252
Fax: (905) 666-5256
e-mail: bba@bba-archeng.com

LICENSED PROFESSIONAL ENGINEER H.D. COHEN 90414335 FEB09/2021 PROVINCE OF ONTARIO

SUB-CONSULTANT

HCC ENGINEERING
DESIGN AND TECHNOLOGY SERVICES GROUP
HCC ENGINEERING LIMITED
40 EGLINTON AVENUE EAST, SUITE 600
TORONTO, ONTARIO, M4P 3A2
Tel: (416) 932-2423

LICENSED PROFESSIONAL ENGINEER X. P. CHEN 100219955 FEB09/2021 PROVINCE OF ONTARIO

HCC Project No.: 20104

| | |
|---|---|
| DESIGN BY: PC | SCALE AS SHOWN |
| DRAWN BY: TLR | DATE: 2020-05-01 |
| CHECKED BY: PC/HDC | CONSULTANT PROJECT NO. 20060 |
| APPROVED BY: HDC | |

CONTRACT REVISIONS

| NO. | DATE | NAME | REVISIONS |
|---|---|---|---|
| | | | |
| | | | |
| | | | |
| | | | |
| | | | |
| | | | |
| 3 | FEB09/2021 | HCC | ISSUED FOR PERMIT & TENDER |
| 2 | OCT30/2020 | HCC | ISSUED FOR 90% REVIEW |
| 1 | JUNE 1/20 | HCC | ISSUED FOR 60% REVIEW |

DURHAM REGION

THE REGIONAL MUNICIPALITY OF DURHAM
WORKS DEPARTMENT
DESIGN, CONSTRUCTION & ASSET MANAGEMENT

# RELOCATION OF DENTAL CLINIC TO 200 JOHN ST., OSHAWA

## ELECTRICAL DETAILS

| PROPERTY NO. | FACILITY CODE | FACILITIES PROJECT NO. |
|---|---|---|
| N/A | LEA-0-07 | LEA-0-07-19-01 |
| CONTRACT NO. | DRAWING NO. | SHEET NO. |
| T-1032-2021 | E-004 | 037 |

F:\Projects 2020\20104\E-004E.dwg

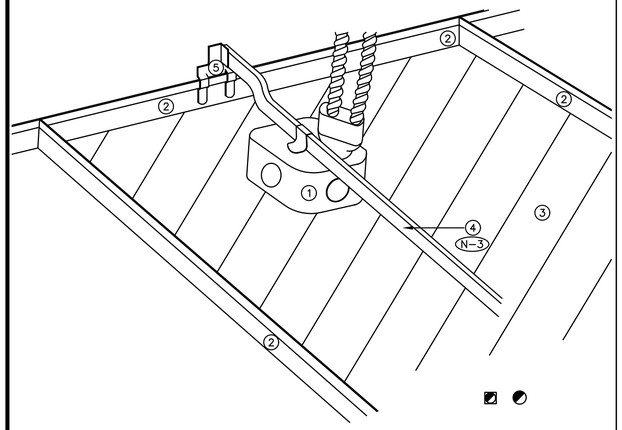


N-1 DETAIL IS DIAGRAMMATIC ONLY.

N-2 REFER TO FLOOR PLANS FOR EXACT QUANTITY AND LOCATION OF DEVICES.

N-3 CONDUIT, TIE WIRE AND OTHER ASSEMBLY MEANS TO SUPPORT DEVICE BACKBOX IS NOT ACCEPTABLE.

1 BACKBOX SUPPORTING SMOKE DETECTOR/HEAT DETECTOR

2 CEILING TILE FRAME

3 CEILING TILE

4 BOX HANGER C/W BOX MOUNTING CLIP

5 T-BAR CLIP

1 / E-005 TYPICAL FIRE DETECTOR T-BAR CEILING SUPPORT DETAIL

SCALE: NTS

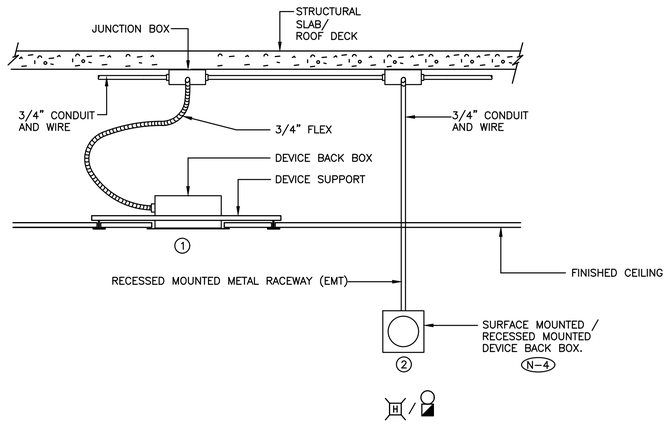


N-1 DETAIL IS DIAGRAMMATIC ONLY.

N-2 REFER TO FLOOR PLANS FOR EXACT QUANTITY AND LOCATION OF DEVICES.

N-3 CONDUIT/TIE WIRE AND OTHER ASSEMBLY MEANS TO SUPPORT DEVICE BACKBOX IS NOT ACCEPTABLE.

N-4 ALL WALL MOUNTED DEVICES TO BE RECESSED MOUNTED FOR ALL INTERIOR PARTITIONS.

1 CEILING MOUNTED FIRE ALARM SYSTEM SIGNALLING DEVICE.

2 WALL MOUNTED FIRE ALARM SYSTEM SIGNALLING DEVICE.

2 / E-005 WALL/CEILING MOUNTED FIRE ALARM SYSTEM SIGNALLING DEVICE DETAIL

SCALE: NTS

FIXTURE SCHEDULE

TYPE A – 25W 3000 LUMEN 2' X 2' RECESSED MOUNTED LED FIXTURE, SUITABLE FOR LAY-IN CEILING C/W IN LINE POWER DISCONNECT, POWER SUPPLY, 120V 0 TO 10VDC DIMMING DRIVER, BASKET LENS AND LAMP (4000K/85% CRI). PACO LIGHTING PRTX-22-L-30-40-MV-DM OR APPROVED EQUAL.

TYPE AA – 40W 5000 LUMEN 2' X 2' RECESSED MOUNTED LED FIXTURE, SUITABLE FOR LAY-IN CEILING C/W IN LINE POWER DISCONNECT, POWER SUPPLY, 120V 0 TO 10VDC DIMMING DRIVER, BASKET LENS AND LAMP (4000K/85% CRI). PACO LIGHTING PRTX-22-L-50-40-MV-DM OR APPROVED EQUAL.

TYPE A1 – 1' X 4' SURFACE MOUNTED FLUORESCENT FIXTURE C/W ELECTRONIC BALLAST, WRAP AROUND ACRYLIC LENS AND 2 X 32W T8 LAMPS.

TYPE A2 – 1' X 4' RECESSED MOUNTED FLUORESCENT FIXTURE, SUITABLE FOR LAY-IN CEILING C/W ELECTRONIC BALLAST, ACRYLIC LENS AND 2 X 32W T8 LAMPS.

TYPE A3 – 1' X 4' RECESSED MOUNTED FLUORESCENT FIXTURE, SUITABLE FOR LAY-IN CEILING C/W ELECTRONIC BALLAST AND 2 X 32W T8 LAMPS.

TYPE A4 – 2' X 4' RECESSED MOUNTED FLUORESCENT FIXTURE, SUITABLE FOR LAY-IN CEILING C/W ELECTRONIC BALLAST, ACRYLIC LENS AND 4 X 32W T8 LAMPS.

TYPE A5 – 2' X 4' RECESSED MOUNTED FLUORESCENT FIXTURE, SUITABLE FOR LAY-IN CEILING C/W ELECTRONIC BALLAST AND 4 X 32W T8 LAMPS.

TYPE A6 – 2' X 2' RECESSED MOUNTED FLUORESCENT FIXTURE, SUITABLE FOR LAY-IN CEILING C/W ELECTRONIC BALLAST, ACRYLIC LENS AND 2 X 32W T8 U-LAMPS.

TYPE A7 – 4' SUSPENDED FLUORESCENT STRIP FIXTURE C/W ELECTRONIC BALLAST, WIRE GUARD AND 2 X 32W T8 LAMPS.

TYPE A8 – 4' SURFACE MOUNTED FLUORESCENT STRIP FIXTURE C/W ELECTRONIC BALLAST AND 2 X 32W T8 LAMPS.

TYPE B – 10W 983 LUMEN 4" LED RECESSED ROUND DOWNLIGHT SUITABLE FOR DRYWALL CEILING C/W IN LINE POWER DISCONNECT, 120V 0 TO 10VDC DIMMING DRIVER AND LAMP (4000K 90%CRI). PATHWAY LIGHTING 4VLFL2X11004KE1DA, 4VLED SCLPF OR APPROVED EQUAL.

TYPE B1 – 7W 688 LUMEN 4" LED RECESSED ROUND DOWNLIGHT SUITABLE FOR DRYWALL CEILING C/W IN LINE POWER DISCONNECT, 120V 0 TO 10VDC DIMMING DRIVER AND LAMP (4000K 90%CRI). PATHWAY LIGHTING 4VLFL2X8004KE1DA, 4VLED SCLPF OR APPROVED EQUAL.

TYPE B2 – 6" RECESSED MOUNTED DOWNLIGHT SUITABLE FOR LAY-IN CEILING C/W ELECTRONIC BALLAST AND LAMP.

TYPE B3 – RECESSED MOUNTED ADJUSTABLE DOWNLIGHT SUITABLE FOR LAY-IN CEILING C/W ELECTRONIC BALLAST AND MR16 LAMP (3500K/85% CRI).

TYPE C – LED UNDERCABINET FIXTURE C/W IN LINE POWER DISCONNECT AND LAMPS (4000K, 97%CRI). COLOR KINETICS EW PROFILE POWERCOVE GEN4 OR APPROVED EQUAL FOR SHADOWLESS ILLUMINATION C/W 120 VOLT REVERSE PHASE DIMMING ELECTRONIC DRIVERS (QUANTITY TO SUIT RUN LENGTH), INSTALLATION MOUNTING CHANNEL, LEAD CABLES, 125X120 BEAM SPREAD. REFER TO ARCHITECTURAL DRAWINGS FOR RUN LENGTH AND ADDITIONAL BUILD OUT DETAILS .

TYPE D1 – EMERGENCY LIGHTING SYSTEM C/W 10 YEAR 24VOLT/720W/0.5 HOUR/BATTERY UNIT/120/347 VOLT INPUT/LUMACELL RGS SERIES OR BEGHELLI NOVA SERIES OR APPROVED EQUAL

TYPE D2 – 2 X 4W MR16 LED 24V SIGNATURE COLLECTION OR 2 X 5W MR16 24V BEGHELLI BTMR SERIES REMOTE HEADS OR APPROVED EQUAL, WHITE IN COLOUR.

TYPE D3 – 1 X 4W MR16 LED 24V SIGNATURE COLLECTION OR 1 X 5W MR16 24V BEGHELLI BTMR SERIES REMOTE HEADS OR APPROVED EQUAL, WHITE IN COLOUR.

TYPE D4 – 2 X 6W MR16 LED 24V SIGNATURE COLLECTION OR 2 X 7W MR16 24V BEGHELLI BTMR SERIES REMOTE HEADS OR APPROVED EQUAL, WHITE IN COLOUR.

TYPE D7 – 1 X DC REMOTE HEAD

TYPE D8 – 2 X DC REMOTE HEADS

TYPE D9 – EMERGENCY LIGHTING SYSTEM DC BATTERY UNIT

TYPE E1 – PICTOGRAM WHITE LED EXIT SIGN C/W 120/347VAC/24VDC LED. LUMACELL LA-3 SERIES PICTOGRAM EXTRUDED ALUMINUM EXIT SIGN C/W LUMACELL EZ2 CANOPY OR BEGHELLI STELLA RM SERIES SL-RM-L-U-OLR-M-120/347-UDC OR APPROVED EQUAL.

TYPE E2 – EXIT SIGN. READ TYPE.

3 / E-005 FIXTURE SCHEDULE

SCALE: NTS

ALL MEASUREMENTS ARE TO BE VERIFIED BY THE CONTRACTOR ON SITE AND ANY DISCREPANCIES ARE TO BE REPORTED BEFORE PROCEEDING WITH THE WORK. THE REGION OF DURHAM ASSUMES NO RESPONSIBILITY FOR THE ACCURACY OF THE LOCATION OF EXISTING SERVICES AS INDICATED ON THIS DRAWING. DO NOT SCALE DRAWINGS.

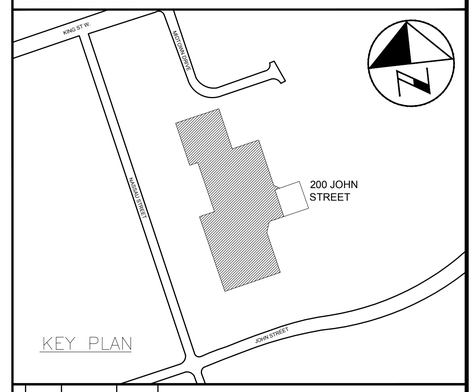


| NO. | DATE | NAME | REVISIONS |
|---|---|---|---|
| | | | |

CONSULTANT REVISIONS

PRIME CONSULTANT

BARRY BRYAN ASSOCIATES
Architects
Engineers
Project Managers
250 Water St.
Suite 201
Whitby, Ontario
L1N 0G5
Tel: (905) 666-5252
Fax: (905) 666-5256
e-mail: bba@bba-arcneng.com

LICENSED PROFESSIONAL ENGINEER H.D. COHEN 90414335 FEB09/2021 PROVINCE OF ONTARIO

SUB-CONSULTANT

HCC ENGINEERING
DESIGN AND TECHNOLOGY SERVICES GROUP
HCC ENGINEERING LIMITED
40 EGLINTON AVENUE EAST, SUITE 600
TORONTO, ONTARIO, M4P 3A2
Tel: (416) 932-2423

LICENSED PROFESSIONAL ENGINEER X. P. CHEN 100219955 FEB09/2021 PROVINCE OF ONTARIO

HCC Project No.: 20104

| | |
|---|---|
| DESIGN BY: PC | SCALE AS SHOWN |
| DRAWN BY: TLR | DATE: 2020-05-01 |
| CHECKED BY: PC/HDC | CONSULTANT PROJECT NO. 20060 |
| APPROVED BY: HDC | |

| NO. | DATE | NAME | REVISIONS |
|---|---|---|---|
| 3 | FEB09/2021 | HCC | ISSUED FOR PERMIT & TENDER |
| 2 | OCT30/2020 | HCC | ISSUED FOR 90% REVIEW |
| 1 | JUNE 1/20 | HCC | ISSUED FOR 60% REVIEW |

CONTRACT REVISIONS

DURHAM REGION

THE REGIONAL MUNICIPALITY OF DURHAM

WORKS DEPARTMENT

DESIGN, CONSTRUCTION & ASSET MANAGEMENT

# RELOCATION OF DENTAL CLINIC TO 200 JOHN ST., OSHAWA

## ELECTRICAL DETAILS

| PROPERTY NO. | FACILITY CODE | FACILITIES PROJECT NO. |
|---|---|---|
| N/A | LEA-0-07 | LEA-0-07-19-01 |
| CONTRACT NO. | DRAWING NO. | SHEET NO. |
| T-1032-2021 | E-005 | 038 |

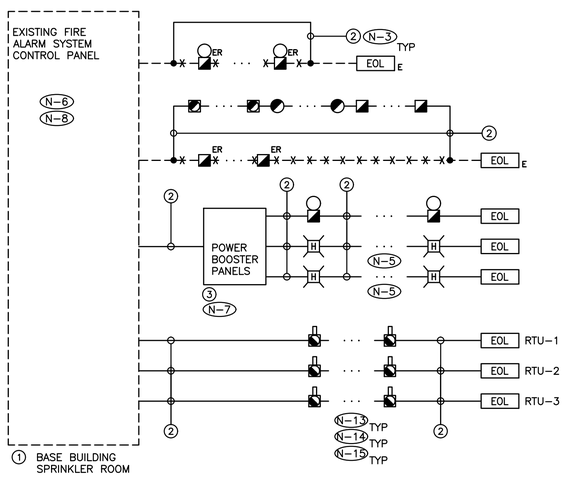


4 / E-005 PARTIAL BASE BUILDING FIRE ALARM SYSTEM RISER DIAGRAM

SCALE: NTS

N-1 RISER IS DIAGRAMMATIC ONLY. PROVIDE QUANTITY OF PROVIDE QUANTITY OF BELL CIRCUITS, INITIATING DEVICE CIRCUITS, HARDWARE, MODULES, ACCESSORIES, DEVICES, CONDUIT, WIRE, ETC. TO ENSURE A FULLY OPERATIONAL FIRE ALARM SYSTEM.

N-2 REFER TO FLOOR PLANS AND REFLECTED CEILING PLANS FOR EXACT QUANTITY AND LOCATION OF DEVICES, DEVICE PERIPHERALS AND ACCESSORIES (IE. WIRE GUARD, EXPLOSION PROOF DEVICES, WEATHER PROOF DEVICES, ETC.).

N-3 PROVIDE POWER, CONDUIT, BACKBOX AND WIRING IN ACCORDANCE WITH MANUFACTURER'S RECOMMENDATIONS. MINIMUM CONDUIT SIZE 3/4".

N-4 PROVIDE DEDICATED CORE DRILLED FLOOR AND WALL PENETRATIONS ON EVERY FLOOR AS REQUIRED FOR FIRE ALARM SYSTEM CONDUITS/MI CABLE. EXACT LOCATION OF ALL CORE DRILLS TO BE DETERMINED BY X-RAYING RESULTS.

N-5 PROVIDE STROBE CIRCUIT SYNCHRONIZATION MODULES.

N-6 MODIFY, REWORK AND PROVIDE ALL COMPONENTS AND ACCESSORIES FOR CONTROL PANEL AS REQUIRED TO ACCOMMODATE ALL SCOPES OF WORK AS NOTED ON DRAWINGS AND IN SPECIFICATION.

N-7 PROVIDE REMOTE ULC APPROVED BOOSTER PANELS AND POWER SUPPLIES, C/W BATTERIES APPROVED FOR THE SIGNALING DEVICES PROVIDED AS PART OF THIS SCOPE OF WORK. REFER TO FLOOR PLANS AND REFLECTED CEILING PLANS FOR LOCATION AND QUANTITY OF SIGNALING DEVICES. PROVIDE ADDRESSABLE INPUT MODULE TO MONITOR THE TROUBLE RELAY.

N-8 PROVIDE ADDITIONAL BATTERIES IN EXISTING CONTROL PANEL AS REQUIRED TO SUPPORT THE TOTAL LOAD REQUIREMENTS AT THE COMPLETION OF THIS PROJECT.

N-9 PROVIDE 24VDC CIRCUITS FOR 24VDC DEVICES. MAXIMUM LOAD ON EACH CIRCUIT SHALL NOT EXCEED 70%. CIRCUIT REQUIREMENTS NOT SHOWN ON RISER DIAGRAM.

N-10 AS PART OF THE BASE BID PRICE ELECTRICAL CONTRACTOR SHALL PROVIDE A FIRE WATCH THROUGHOUT THE DURATION OF THE PROJECT.

N-11 NOT USED.

N-12 DO NOT REUSE EXISTING FIELD WIRING, FIRE ALARM DEVICES, ETC., REMOVED AS PART OF THIS SCOPE OF WORK.

N-13 DUCTMOUNT SMOKE DETECTORS SHALL BE HARD WIRED INTO CORRESPONDING FAN CIRCUITS TO DIRECTLY SHUT DOWN FANS UPON FIRE ALARM CONDITION. PROVIDE CONTACTORS, DVR'S AND ENCLOSURES REQUIRED.

N-14 PROVIDE REMOTE INDICATING LED FOR EACH DUCTMOUNT SMOKE DETECTOR. EXACT MOUNTING LOCATION TO BE DETERMINED ON SITE. LED'S NOT SHOWN ON DRAWINGS.

N-15 EXACT MOUNTING LOCATION OF DUCT MOUNTED SMOKE DETECTORS TO BE DETERMINED BY MANUFACTURER ON SITE.

1 EXISTING FIRE ALARM SYSTEM CONTROL PANEL – MIRCOM SERIES 1000

2 CONDUIT AND WIRE PER MANUFACTURER'S SPECIFICATIONS

3 FIRE ALARM SYSTEM BOOSTER PANEL PROVIDED AS PART OF THIS SCOPE OF WORK

BASE BUILDING FIRE ALARM SYSTEM MANUFACTURER CONTACT: KRYSTAL NICHOLAS, MIRCOM: KNICHOLAS@MIRCOMGROUP.COM / (647) 460-2449

——— DENOTES NEW PROVIDED BY ELECTRICAL CONTRACTOR

– – – – – – – DENOTES EXISTING TO REMAIN

-X-X-X-X-X- DENOTES EXISTING TO BE REMOVED BY ELECTRICAL CONTRACTOR

| DWG FIRE ZONE NO. | FIRE ZONE ID LABEL (N-1) | INITIATING DEVICE | ALARM SIGNAL | TROUBLE SIGNAL |
|---|---|---|---|---|
| DMSD01 | RTU-1 | | * | |
| DMSD02 | RTU-2 | | * | |
| DMSD03 | RTU-3 | | * | |

N-1 ZONE DESCRIPTION TO BE DETERMINED ON SITE.

N-2 'SC' DENOTES SUPERVISORY CONTACT.

N-3 SEQUENCE OF OPERATIONS AND ALARM/ALERT SIGNALING REQUIREMENTS TO BE COORDINATED WITH CONSULTANT, MECHANICAL CONTRACTOR, FIRE ALARM MANUFACTURER AND BUILDING INSPECTOR THROUGH SHOP DRAWING APPROVAL PROCESS.

N-4 SCHEDULE REFLECTS NEW ZONES TO BE ADDED TO THE BASE BUILDING FIRE ALARM SYSTEM AS PART OF THIS CONTRACT. UPDATE EXISTING BASE BUILDING FIRE ALARM SYSTEM CPU, TRANSPONDER, ANNUNCIATOR PANELS, PASSIVE GRAPHIC DISPLAY, ACTIVE GRAPHIC DISPLAY, ETC.

5 / E-005 FIRE ALARM SYSTEM ZONE SCHEDULE

SCALE: NTS

F:\Projects 2020\20104\E-005F.dwg

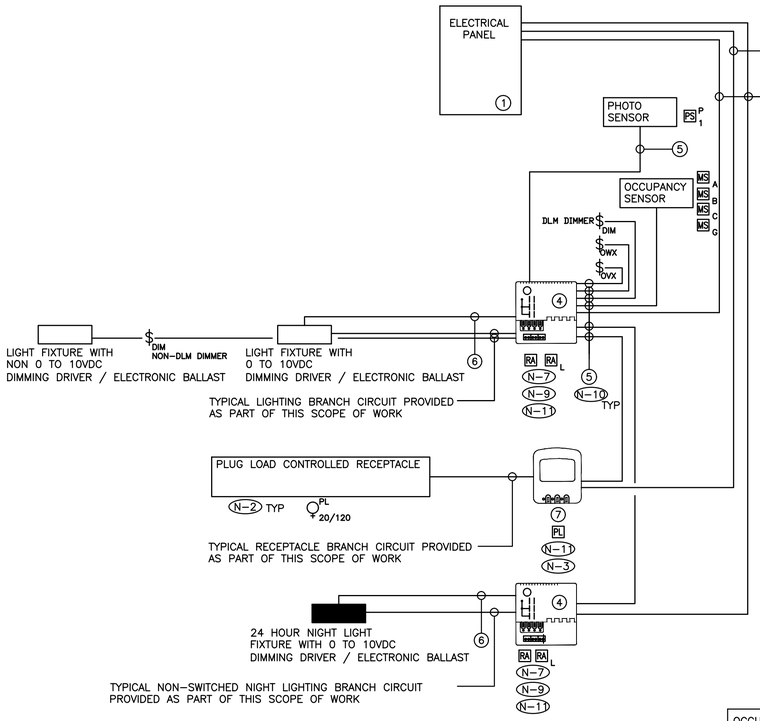


1 E-006 LOW VOLTAGE LIGHTING CONTROL SYSTEM WIRING SCHEMATIC

SCALE: NTS

(N-1) SCHEMATIC IS DIAGRAMMATIC ONLY. REFER TO FLOOR PLANS AND REFLECTED CEILING PLANS FOR DEVICE QUANTITY AND LOCATIONS. PROVIDE QUANTITY OF HARDWARE, ROOM CONTROLLERS, PLUG LOAD CONTROLLERS, SENSORS, DEVICES, CONDUIT, WIRE, CONFIGURATION TOOLS, ETC. TO ENSURE A FULLY OPERATIONAL LOW VOLTAGE LIGHTING CONTROL SYSTEM.

(N-2) ALL CONTROLLED RECEPTACLES SHALL BE PERMANENTLY MARKED TO VISUALLY DIFFERENTIATE THEM FROM UNCONTROLLED RECEPTACLES.

(N-3) PLUG LOAD CONTROLLERS TO BE INSTALLED IN CEILING MOUNTED JUNCTION BOXES.

(N-4) ALL LOW VOLTAGE WIRING TO BE INSTALLED IN AN ENCLOSED CONDUIT SYSTEM.

(N-5) PROVIDE POWER, CONDUIT, BACKBOX AND WIRING IN ACCORDANCE WITH MANUFACTURER'S SPECIFICATIONS. MINIMUM CONDUIT SIZE 3/4".

(N-6) PROVIDE DEDICATED CORE DRILLED WALL AND FLOOR PENETRATIONS ON EVERY FLOOR. EXACT LOCATION OF ALL CORE DRILLS TO BE DETERMINED BY X-RAY RESULTS. ALL X-RAYS MUST BE REVIEWED AND APPROVED BY LANDLORD PRIOR TO CORE DRILLING.

(N-7) PROVIDE ROOM CONTROLLERS TO ACCOMMODATE ALL LIGHTING ZONES IN CLOSED ROOMS (IE. OFFICES, MEETING ROOMS, ETC.) PROVIDED AS PART OF THIS SCOPE OF WORK. MAXIMUM OF TWO (2) SWITCH LEGS PER ROOM CONTROLLER.

(N-8) NOT USED.

(N-9) ROOM CONTROLLERS TO BE INSTALLED IN CEILING MOUNTED JUNCTION BOXES.

(N-10) TERMINATE AND TEST ALL LOW VOLTAGE CONTROL CABLES PROVIDED AS PART OF THIS SCOPE OF WORK. PROVIDE TEST RESULTS FOR ALL LOW VOLTAGE CONTROL CABLES PROVIDED AS PART OF THIS SCOPE OF WORK AT THE END OF CONSTRUCTION. TEST RESULTS SHALL BE INCLUDED AS PART OF THE CLOSE OUT DOCUMENTS. REFER TO SPECIFICATIONS FOR ADDITIONAL REQUIREMENTS.

(N-11) REFER TO MANUFACTURER'S INSTALLATION GUIDELINES FOR ADDITIONAL INSTALLATION REQUIREMENTS OVER AND ABOVE THOSE DETAILS ON THIS SCHEMATIC.

(N-12) NOT USED.

(N-13) NOT USED.

(N-14) PROVIDE POWER PACKS, AS REQUIRED FOR A FULLY OPERATIONAL SYSTEM. POWER PACKS NOT SHOWN ON REFLECTED CEILING PLANS.

(N-15) ELECTRICAL CONTRACTOR'S BASE BID PRICE SHALL INCLUDE EIGHT (8) HOURS OF ON SITE COORDINATION TIME WITH LIGHTING CONTROL SYSTEM MANUFACTURER PRIOR TO ORDERING LIGHTING SYSTEM COMPONENTS TO CONFIRM DEVICES AND WIRING REQUIREMENTS. ALL CHANGES TO BE REVIEWED AND APPROVED BY CONSULTANT ON SITE PRIOR TO EXECUTION.

(N-16) LIGHT LEVEL OUTPUT (IE, DIMMING LEVEL) FOR EACH AND EVERY FIXTURE PROVIDED AS PART OF THIS SCOPE OF WORK IN ROOMS WITH DLM CONTROL TO BE FIELD ADJUSTED ON SITE WITH CLIENT POST OCCUPANCY. TARGET LIGHT LEVELS FOR EACH LOW VOLTAGE LIGHTING ZONE TO BE PROVIDED BY THE CLIENT POST OCCUPANCY. PROCURE (COORDINATE AND PAY FOR) THE SERVICES OF LIGHTING CONTROL SYSTEM MANUFACTURE TO ADJUST, PROGRAM AND COMMISSION THE LIGHTING CONTROL SYSTEM.

AS PART OF THIS SCOPE OF WORK PROCURE THE SERVICES OF A THIRD PARTY PROFESSIONAL ENGINEER TO MEASURE AND RECORD LIGHTING LEVELS IN FOOT CANDLES THROUGHOUT THE ENTIRE SCOPES OF WORK AREAS WITH A CALIBRATED LIGHT METER, AFTER ALL FIELD ADJUSTMENTS HAVE BEEN COMPLETED. READINGS SHALL BE TAKEN BASED ON A MINIMUM OF ONE READING FOR EVERY 20' CENTER IN OPEN OFFICE AREAS AND CORRIDORS / HALLWAYS AND ONE READING IN EACH CLOSED OFFICE, MEETING ROOM, BOARDROOM, ETC. ALL LIGHT LEVEL READINGS ARE TO BE TAKEN DURING NON-DAYLIGHT HOURS. PROVIDE A SEALED REPORT IDENTIFYING LIGHT LEVEL READINGS.

INSTALL LOW VOLTAGE CONTROL SYSTEM IN ACCORDANCE WITH THE MANUFACTURER'S INSTRUCTIONS, ASHRAE 90.1 2013, ONTARIO BUILDING CODE, ELECTRICAL SAFETY CODE AND THESE DOCUMENTS.

1. TYPICAL RECEPTACLE / LIGHTING PANEL. REFER TO DRAWING NO. E-015 FOR ADDITIONAL REQUIREMENTS
2. NOT USED
3. NOT USED
4. ON / OFF / DIMMING ROOM CONTROLLER
5. PLENUM RATED 4 PAIR CAT6 UTP CABLE AS MANUFACTURED BY LIGHTING CONTROL SYSTEM MANUFACTURER
6. 0 TO 10VDC CONTROL WIRING PER MANUFACTURER'S RECOMMENDATIONS
7. PLUG LOAD CONTROLLER

———— DENOTES NEW PROVIDED BY ELECTRICAL CONTRACTOR.

— — — — — DENOTES EXISTING TO REMAIN.

-*-*-*-*-*- DENOTES EXISTING TO BE REMOVED BY ELECTRICAL CONTRACTOR.

OCCUPANCY SENSORS FOR AUTOMATIC SHUT OFF OF LIGHTING WITHIN OPERATORIES HAVE NOT BEEN SPECIFIED AS LIGHTING DURING ROOM USE CANNOT BE INTERRUPTED FOR SAFETY REASONS.

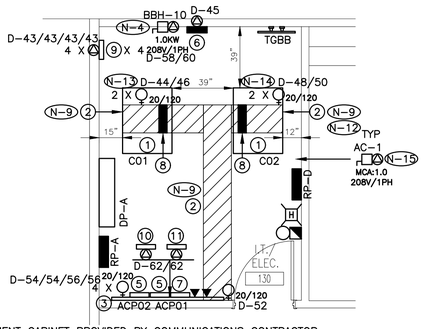


2 E-006 IT/ELECTRICAL ROOM DETAIL

SCALE: 1:50

1. EQUIPMENT CABINET PROVIDED BY COMMUNICATIONS CONTRACTOR
2. 18"W LADDER TYPE CABLE TRAY WITH 12" RUNG SPACING – TYPE UNIVERSAL CABLE RUNWAY AS MANUFACTURED BY CPI, BLACK IN COLOUR FOR COMMUNICATIONS CONTRACTOR'S USE PROVIDED AS PART OF THIS SCOPE OF WORK. PROVIDE CPI PROTECTIVE END CAPS. MOUNT CABLE TRAY AT 8'-0" AFF.
3. 6'W X 8'H X 3/4"D FIRE RATED PLYWOOD BACKBOARD FOR COMMUNICATIONS AND SECURITY CONTRACTORS' USE. PAINT BACKBOARD WITH FIRE RETARDANT PAINT. MATCH TO COLOUR AS DIRECTED ON SITE BY ARCHITECT. FIRE RATED STAMP MUST BE ON ALL PIECES PROVIDED AND MUST BE VISIBLE WHEN INSTALLED. DO NOT PAINT OVER STAMP.
4. NOT USED
5. SECURITY SYSTEM ACCESS CONTROL PANEL SUPPLIED BY CLIENT AND INSTALLED BY ELECTRICAL CONTRACTOR AS PART OF THIS SCOPE OF WORK
6. FIRE ALARM SYSTEM BOOSTER PANEL PROVIDED AS PART OF THIS SCOPE OF WORK
7. ELECTRIC STRIKE POWER SUPPLY SUPPLIED BY CLIENT AND INSTALLED BY ELECTRICAL CONTRACTOR AS PART OF THIS SCOPE OF WORK
8. STRINGER RADIUS DROP
9. TIME CLOCK SUPPLIED BY MECHANICAL CONTRACTOR AND INSTALLED BY ELECTRICAL CONTRACTOR
10. INTRUSION CONTROL PANEL ZONE EXPANDER C/W ENCLOSURE SUPPLIED BY CLIENT AND INSTALLED BY ELECTRICAL CONTRACTOR AS PART OF THIS SCOPE OF WORK
11. INTRUSION CONTROL PANEL SUPPLIED BY CLIENT AND INSTALLED BY ELECTRICAL CONTRACTOR AS PART OF THIS SCOPE OF WORK

(N-1) EXACT LOCATION OF ALL DEVICES AND RESPECTIVE HEIGHTS TO BE COORDINATED ON SITE WITH ARCHITECT.

(N-2) NEATLY LABEL ALL FLOOR MOUNTED AND WALL DEVICE BOX COVERS WITH CORRESPONDING PANEL NAMES AND CIRCUIT NUMBERS, UTILIZE SELF ADHESIVE MECHANICALLY PRINTED LABELS.

(N-3) CIRCUIT NUMBERS MAY NOT BE CHANGED WITHOUT PRIOR APPROVAL FROM THE ELECTRICAL ENGINEER.

(N-4) CONFIRM BREAKER/FUSE AND RECEPTACLE/DISCONNECT REQUIREMENTS PRIOR TO INSTALLATION.

(N-5) LAYOUT OF DISTRIBUTION EQUIPMENT, GROUND BARS, CABLE TRAY, ETC. MUST BE AS SHOWN ON DRAWING. CONTRACTOR IS NOT TO DEVIATE FROM LAYOUT. CONTRACTOR TO MARK EXACT LOCATION AND LAYOUT OF ALL DISTRIBUTION, EQUIPMENT, ETC. PROVIDED AS PART OF THIS SCOPE OF WORK AND ALL EQUIPMENT CABINET AND EQUIPMENT RACK FOOTPRINTS ON SLAB FOR FINAL REVIEW AND APPROVAL FROM STRUCTURAL ENGINEER AND ELECTRICAL ENGINEER. ELECTRICAL CONTRACTOR SHALL BE RESPONSIBLE FOR COORDINATING LAYOUT WITH MECHANICAL DUCT WORK, SPRINKLER PIPING, EXISTING CONDUIT SYSTEMS, ETC.

(N-6) AS PART OF THE BASE BID PRICE ELECTRICAL CONTRACTOR SHALL PROVIDE (SUPPLY AND INSTALL) AN ADDITIONAL TWO (2) WALL MOUNTED CSA 5-20R (T SLOT) DUPLEX RECEPTACLES OVER AND ABOVE THOSE SHOWN ON DETAIL NO. 1 ON DRAWING NO. E-006 ON AN AD HOC BASIS UP TO SUBSTANTIAL COMPLETION. EACH ADDITIONAL RECEPTACLE SHALL BE ON A DEDICATED CIRCUIT COMPLETE WITH BRANCH WIRING (CONDUIT AND WIRE) AND BREAKER. BREAKER REQUIREMENTS NOT INDICATED ON PANEL SCHEDULES.

PROVIDE RECEPTACLES, CONDUIT, WIRE (200' OF 2#10AWG + G (TOTAL OF 400' WIRE PLUS G) AND 200' 3/4" CONDUIT/RECEPTACLE), BREAKERS, TERMINATION AT PANEL BREAKER END AND AT DEVICE END, ETC. FOR FULLY FUNCTIONAL LIVE DEVICES. EXACT INSTALLATION LOCATION AND PANEL SOURCE TO BE DETERMINED ON SITE BY CLIENT DURING CONSTRUCTION. PROVIDE UPDATED TYPED PANEL SCHEDULES FOR ALL PANELS AT THE COMPLETION OF THE PROJECT.

(N-7) ROUTE ALL CONDUIT SYSTEMS AROUND BEAMS, DUCT WORK AND PIPING AS REQUIRED TO ACCOMMODATE INSTALLATION. REFER TO MECHANICAL DRAWINGS AND ARCHITECT DRAWINGS FOR ADDITIONAL DETAILS.

(N-8) ALL SERVICES TO BE PULLED IN EMT CONDUIT.

(N-9) ALL CABLE TRAY SEGMENTS SHALL BE SUSPENDED FROM CEILING STRUCTURE. SUPPORT AT A MAXIMUM OF 4' INTERVALS. SUPPORT INFRASTRUCTURE SHALL BE SUBMITTED BY ELECTRICAL CONTRACTOR FOR REVIEW AND APPROVAL BY THE STRUCTURAL ENGINEER. AS A MINIMUM PROVIDE 1-5/8" X 3-1/4", 12 GAUGE SOLID UNISTRUT CHANNEL. HANG DIRECTLY FROM CEILING STRUCTURE UTILIZING 5/8" THREADED ROD, CPI 11408-003 SUPPORT BRACKETS AND 5/8" DIAMETER HUS-H HILTI SCREW ANCHORS. SPAN ACROSS BEAMS AS REQUIRED.

(N-10) ELECTRICAL CONTRACTOR'S BASE BID PRICE SHALL INCLUDE FOUR (4) HOURS OF ON SITE COORDINATION TIME WITH CLIENT AND CONSULTANT PRIOR TO ORDERING OVERHEAD CABLE TRAY COMPONENTS TO FINALIZE ROUTING, LOCATIONS AND HEIGHTS OF OVERHEAD CABLE TRAY SYSTEMS. ALL CHANGES TO BE REVIEWED AND APPROVED BY CONSULTANT ON SITE PRIOR TO EXECUTION.

(N-11) PROVIDE CABLE TRAY SYSTEMS, FITTINGS, ACCESSORIES, ETC. AS REQUIRED FOR COMPLETE AND FUNCTIONING SYSTEMS.

(N-12) PROVIDE SPLICE HARDWARE TO BOLT ALL CABLE TRAY SECTIONS TOGETHER.

(N-13) MOUNT RECEPTACLES INDICATED 6" ABOVE CABINET C01.

(N-14) MOUNT RECEPTACLES INDICATED 6" ABOVE CABINET C02.

(N-15) AS PART OF THIS SCOPE OF WORK FEED AC-1 THROUGH CONDENSER CU-1. PROVIDE CONDUIT AND POWER AND CONTROL WIRING AS PART OF THIS SCOPE OF WORK. COORDINATE EXACT REQUIREMENTS ON SITE WITH MECHANICAL CONTRACTOR.

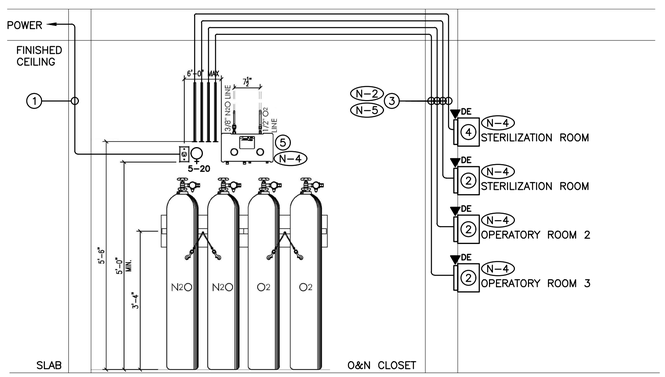


(N-1) EXACT LOCATION OF ALL DEVICES AND RESPECTIVE HEIGHTS TO BE COORDINATED ON SITE WITH DENTAL EQUIPMENT CONTRACTOR.

(N-2) PROVIDE NYLON INSULATED THROATS FOR ALL BUSHINGS AND CONNECTORS.

(N-3) PROVIDE DEDICATED CORE DRILLED WALL AND FLOOR PENETRATIONS ON EVERY FLOOR. EXACT LOCATION OF ALL CORE DRILLS TO BE DETERMINED BY X-RAY RESULTS. ALL X-RAYS MUST BE REVIEWED AND APPROVED BY LANDLORD PRIOR TO CORE DRILLING.

(N-4) COORDINATE CONDUIT TERMINATION REQUIREMENTS ON SITE WITH DENTAL EQUIPMENT CONTRACTOR.

(N-5) LOW VOLTAGE CABLES, WIRING AND TERMINATIONS PROVIDED BY DENTAL EQUIPMENT CONTRACTOR.

1. TYPICAL BRANCH CIRCUIT PROVIDE AS PART OF THIS SCOPE OF WORK
2. ALARM PANEL PROVIDED BY DENTAL EQUIPMENT CONTRACTOR
3. 3/4" CONDUIT C/W ONE (1) CAT6 CABLE, BUSHINGS AND RUBBERIZED GROMMETS FOR DENTAL EQUIPMENT CONTRACTOR'S USE PROVIDED AS PART OF THIS SCOPE OF WORK
4. MEDICAL GASES EMERGENCY SHUT OFF PROVIDED BY DENTAL EQUIPMENT CONTRACTOR
5. MEDICAL GASES SYSTEM MANIFOLD PROVIDED BY DENTAL EQUIPMENT CONTRACTOR

3 E-006 MEDICAL GASES SYSTEM ELECTRICAL REQUIREMENT DETAIL

SCALE: NTS

ALL MEASUREMENTS ARE TO BE VERIFIED BY THE CONTRACTOR ON SITE AND ANY DISCREPANCIES ARE TO BE REPORTED BEFORE PROCEEDING WITH THE WORK. THE REGION OF DURHAM ASSUMES NO RESPONSIBILITY FOR THE ACCURACY OF THE LOCATION OF EXISTING SERVICES AS INDICATED ON THIS DRAWING. DO NOT SCALE DRAWINGS.

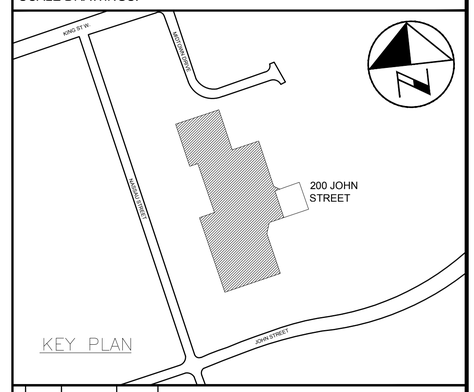


CONSULTANT REVISIONS

| NO. | DATE | NAME | REVISIONS |
|---|---|---|---|
| | | | |
| | | | |
| | | | |
| | | | |
| | | | |
| | | | |
| | | | |
| | | | |
| | | | |

PRIME CONSULTANT

BARRY BRYAN ASSOCIATES
Architects
Engineers
Project Managers
250 Water St.
Suite 201
Whitby, Ontario
L1N 0G5
Tel: (905) 666-5252
Fax: (905) 666-5256
e-mail: bba@bba-arcneng.com

LICENSED PROFESSIONAL ENGINEER
H.D. COHEN
90414335
FEB09/2021
PROVINCE OF ONTARIO

SUB-CONSULTANT

HCC ENGINEERING
DESIGN AND TECHNOLOGY SERVICES GROUP
HCC ENGINEERING LIMITED
40 EGLINTON AVENUE EAST, SUITE 600
TORONTO, ONTARIO, M4P 3A2
Tel: (416) 932-2423

LICENSED PROFESSIONAL ENGINEER
X. P. CHEN
100219955
FEB09/2021
PROVINCE OF ONTARIO

HCC Project No.: 20104

| | | | |
|---|---|---|---|
| DESIGN BY: | PC | SCALE | AS SHOWN |
| DRAWN BY: | TLR | DATE: | 2020-05-01 |
| CHECKED BY: | PC/HDC | CONSULTANT PROJECT NO. | 20060 |
| APPROVED BY: | HDC | | |

CONTRACT REVISIONS

| NO. | DATE | NAME | REVISIONS |
|---|---|---|---|
| | | | |
| | | | |
| | | | |
| | | | |
| | | | |
| 3 | FEB09/2021 | HCC | ISSUED FOR PERMIT & TENDER |
| 2 | OCT30/2020 | HCC | ISSUED FOR 90% REVIEW |
| 1 | JUNE 1/20 | HCC | ISSUED FOR 60% REVIEW |

DURHAM REGION

THE REGIONAL MUNICIPALITY OF DURHAM
WORKS DEPARTMENT
DESIGN, CONSTRUCTION & ASSET MANAGEMENT

# RELOCATION OF DENTAL CLINIC TO 200 JOHN ST., OSHAWA

## ELECTRICAL DETAILS

| PROPERTY NO. | FACILITY CODE | FACILITIES PROJECT NO. |
|---|---|---|
| N/A | LEA-0-07 | LEA-0-07-19-01 |
| CONTRACT NO. | DRAWING NO. | SHEET NO. |
| T-1032-2021 | E-006 | 039 |

F:\Projects 2020\20104\E-006E.dwg

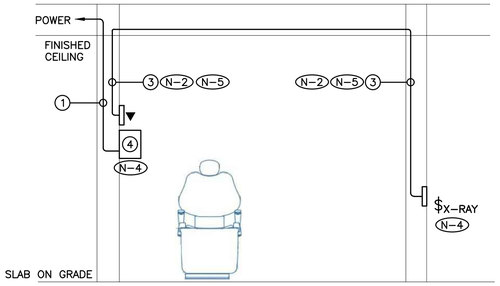


N-1 EXACT LOCATION OF ALL DEVICES AND RESPECTIVE HEIGHTS TO BE COORDINATED ON SITE WITH DENTAL EQUIPMENT CONTRACTOR.

N-2 PROVIDE NYLON INSULATED THROATS FOR ALL BUSHINGS AND CONNECTORS.

N-3 PROVIDE DEDICATED CORE DRILLED WALL AND FLOOR PENETRATIONS ON EVERY FLOOR. EXACT LOCATION OF ALL CORE DRILLS TO BE DETERMINED BY X-RAY RESULTS. ALL X-RAYS MUST BE REVIEWED AND APPROVED BY LANDLORD PRIOR TO CORE DRILLING.

N-4 COORDINATE CONDUIT TERMINATION REQUIREMENTS ON SITE WITH DENTAL EQUIPMENT CONTRACTOR.

N-5 LOW VOLTAGE CABLES, WIRING AND TERMINATIONS PROVIDED BY DENTAL EQUIPMENT CONTRACTOR.

1. TYPICAL BRANCH CIRCUIT PROVIDE AS PART OF THIS SCOPE OF WORK
2. NOT USED
3. 3/4" CONDUIT C/W BUSHINGS AND RUBBERIZED GROMMETS FOR DENTAL EQUIPMENT CONTRACTOR'S USE PROVIDED AS PART OF THIS SCOPE OF WORK
4. X-RAY CONTROL BOX PROVIDED BY OTHERS

1 / E-007 X-RAY ELECTRICAL REQUIREMENT DETAIL
SCALE: N.T.S.

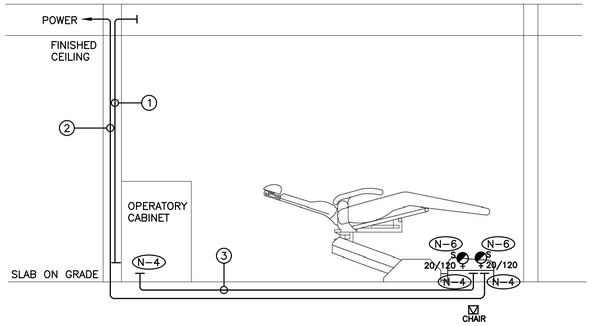


N-1 EXACT LOCATION OF ALL DEVICES AND RESPECTIVE HEIGHTS TO BE COORDINATED ON SITE WITH DENTAL EQUIPMENT CONTRACTOR.

N-2 PROVIDE NYLON INSULATED THROATS FOR ALL BUSHINGS AND CONNECTORS.

N-3 SAW CUTTING OF FLOOR SLAB PROVIDED BY ELECTRICAL CONTRACTOR. EXACT ROUTING TO BE DETERMINED BY SCANNING/X-RAY RESULTS. SUBMIT LAYOUT C/W CONDUIT SIZES TO ELECTRICAL CONSULTANT FOR APPROVAL PRIOR TO CUTTING OF FLOOR SLAB.

N-4 COORDINATE CONDUIT TERMINATION REQUIREMENTS ON SITE WITH DENTAL EQUIPMENT CONTRACTOR.

N-5 LOW VOLTAGE CABLES, WIRING AND TERMINATIONS PROVIDED BY DENTAL EQUIPMENT CONTRACTOR.

N-6 CONFIRM RECEPTACLE MOUNTING STYLE AND LOCATION ON SITE WITH DENTAL EQUIPMENT CONTRACTOR.

1. 2" CONDUIT C/W PULL STRING FOR DENTAL EQUIPMENT CONTRACTOR'S USE
2. TYPICAL BRANCH CIRCUIT PROVIDE AS PART OF THIS SCOPE OF WORK
3. 2" DIRECT BURIED CONDUIT C/W PULL STRING FOR DENTAL EQUIPMENT CONTRACTOR'S USE

2 / E-007 DENTIST CHAIR ELECTRICAL REQUIREMENT DETAIL
SCALE: NTS

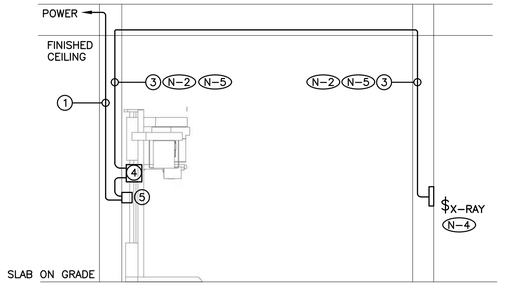


N-1 EXACT LOCATION OF ALL DEVICES AND RESPECTIVE HEIGHTS TO BE COORDINATED ON SITE WITH DENTAL EQUIPMENT CONTRACTOR.

N-2 PROVIDE NYLON INSULATED THROATS FOR ALL BUSHINGS AND CONNECTORS.

N-3 PROVIDE DEDICATED CORE DRILLED WALL AND FLOOR PENETRATIONS ON EVERY FLOOR. EXACT LOCATION OF ALL CORE DRILLS TO BE DETERMINED BY X-RAY RESULTS. ALL X-RAYS MUST BE REVIEWED AND APPROVED BY LANDLORD PRIOR TO CORE DRILLING.

N-4 COORDINATE CONDUIT TERMINATION REQUIREMENTS ON SITE WITH DENTAL EQUIPMENT CONTRACTOR.

N-5 LOW VOLTAGE CABLES, WIRING AND TERMINATIONS PROVIDED BY DENTAL EQUIPMENT CONTRACTOR.

1. TYPICAL BRANCH CIRCUIT PROVIDE AS PART OF THIS SCOPE OF WORK
2. NOT USED
3. 3/4" CONDUIT C/W BUSHINGS AND RUBBERIZED GROMMETS FOR DENTAL EQUIPMENT CONTRACTOR'S USE PROVIDED AS PART OF THIS SCOPE OF WORK
4. X-RAY CONTROL BOX PROVIDED BY OTHERS
5. BUCK & BOOST TRANSFORMER SUPPLIED BY DENTAL EQUIPMENT CONTRACTOR AND INSTALLED BY ELECTRICAL CONTRACTOR AS PART OF THIS SCOPE OF WORK

3 / E-007 PAN X-RAY ELECTRICAL REQUIREMENT DETAIL
SCALE: N.T.S.

N-1 EXACT LOCATION OF ALL DEVICES AND RESPECTIVE HEIGHTS TO BE COORDINATED ON SITE WITH ARCHITECT.

N-2 NEATLY LABEL ALL FLOOR MOUNTED AND WALL DEVICE BOX COVERS WITH CORRESPONDING PANEL NAMES AND CIRCUIT NUMBERS. UTILIZE SELF ADHESIVE MECHANICALLY PRINTED LABELS.

N-3 CIRCUIT NUMBERS MAY NOT BE CHANGED WITHOUT PRIOR APPROVAL FROM THE ELECTRICAL ENGINEER.

N-4 CONFIRM BREAKER AND RECEPTACLE REQUIREMENTS PRIOR TO ORDERING DISTRIBUTION.

N-5 ROUTE ALL CONDUIT SYSTEMS AROUND BEAMS, DUCT WORK AND PIPING AS REQUIRED TO ACCOMMODATE INSTALLATION. REFER TO MECHANICAL DRAWINGS AND DESIGNER DRAWINGS FOR ADDITIONAL DETAILS.

N-6 MINIMUM WIRE SIZE #10AWG FOR ALL 120 VOLT CIRCUITS EXCEEDING 90 FEET IN LENGTH.

N-7 MINIMUM WIRE SIZE #8AWG FOR ALL 120 VOLT CIRCUITS EXCEEDING 200 FEET IN LENGTH.

N-8 NOT USED.

N-9 SAW CUTTING OF FLOOR SLAB PROVIDED BY ELECTRICAL CONTRACTOR. EXACT ROUTING TO BE DETERMINED BY SCANNING/X-RAY RESULTS. SUBMIT LAYOUT C/W CONDUIT SIZES TO ELECTRICAL CONSULTANT FOR APPROVAL PRIOR TO CUTTING OF FLOOR SLAB.

N-10 CONNECT 220 VOLT DEVICES TO 208V CIRCUITS UTILIZING BUCK & BOOST TRANSFORMERS UNLESS INDICATED OTHERWISE. TRANSFORMERS TO BE SUPPLIED BY DENTAL EQUIPMENT CONTRACTOR AND INSTALLED BY ELECTRICAL CONTRACTOR, MOUNTED IN CLOSE PROXIMITY TO DEVICE INDICATED AS PART OF THIS SCOPE OF WORK.

1. APPROXIMATE LOCATION TO TRANSITION SERVICES FROM FLOOR SLAB TO CEILING SPACE.

ALL WIRING, DEVICES AND EQUIPMENT WITHIN OPERATORY ROOMS MUST COMPLY WITH ONTARIO ELECTRICAL SAFETY CODE SECTION 24.

OPERATORY ROOMS ARE PATIENT CARE AREAS. LEVEL OF CARE IS BASIC.

PLUG LOAD CONTROL NOT SPECIFIED FOR OPERATORY EQUIPMENT / AV EQUIPMENT / TV'S AS THIS CAN DAMAGE EQUIPMENT.

PROVIDE A DEDICATED GREEN INSULATED COPPER GROUND WIRE FOR EACH RECEPTACLE, DEVICE, LIGHT SWITCH, ETC., IN PATIENT CARE AREAS, OPERATORIES, ETC..

DENOTES SERVICES PROVIDED AS PART OF THIS SCOPE OF WORK ROUTED THROUGH EXISTING FLOOR SLAB. REFER TO DETAIL NO. 2 ON DRAWING NO. E-007 FOR ADDITIONAL REQUIREMENTS.

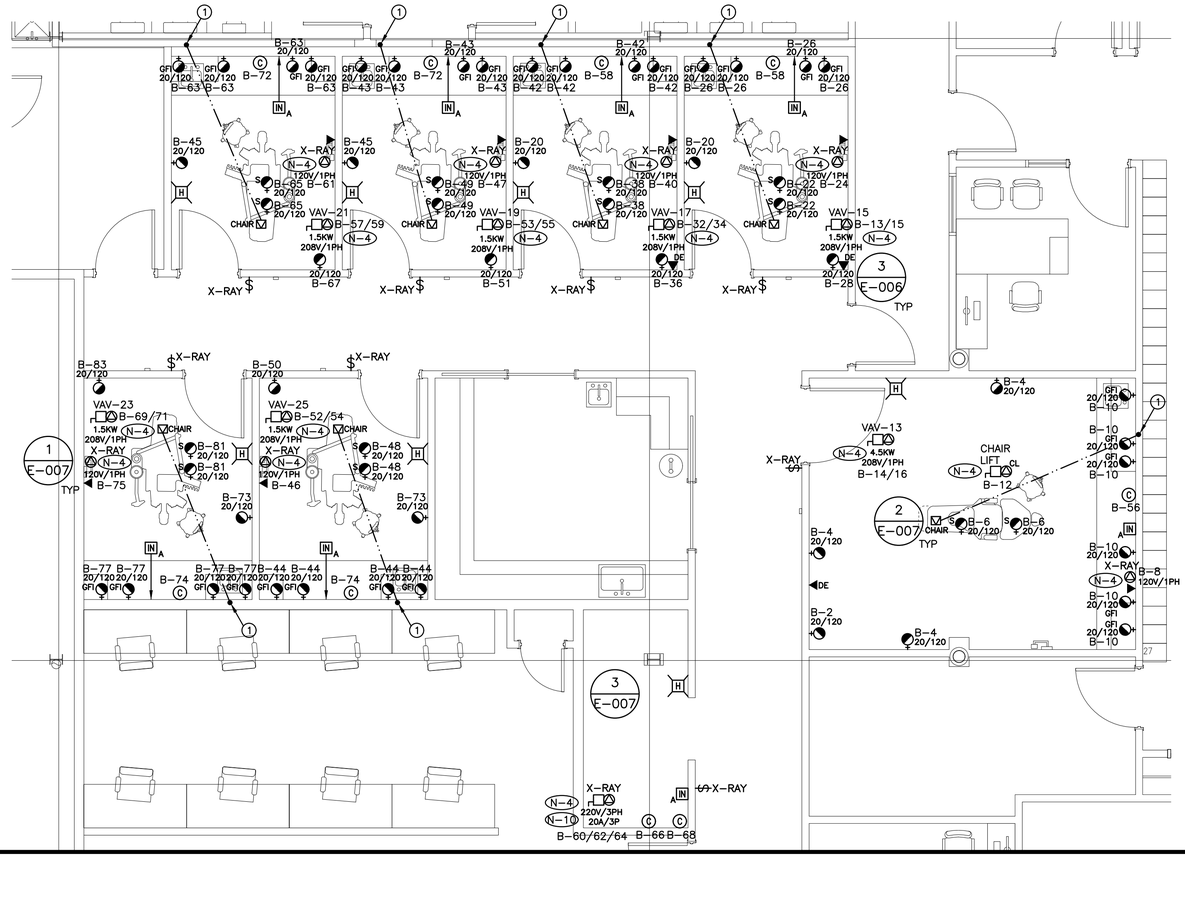


4 / E-007 OPERATORY ELECTRICAL PLAN
SCALE: 1:50

ALL MEASUREMENTS ARE TO BE VERIFIED BY THE CONTRACTOR ON SITE AND ANY DISCREPANCIES ARE TO BE REPORTED BEFORE PROCEEDING WITH THE WORK. THE REGION OF DURHAM ASSUMES NO RESPONSIBILITY FOR THE ACCURACY OF THE LOCATION OF EXISTING SERVICES AS INDICATED ON THIS DRAWING. DO NOT SCALE DRAWINGS.

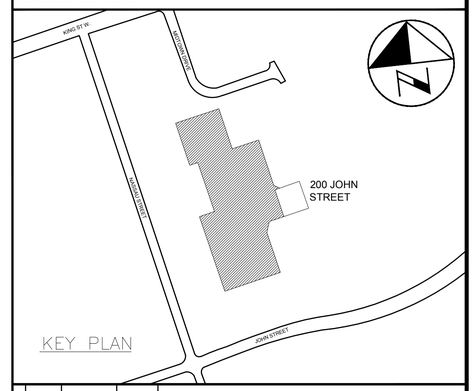


CONSULTANT REVISIONS

| NO. | DATE | NAME | REVISIONS |
|---|---|---|---|
| | | | |
| | | | |
| | | | |
| | | | |
| | | | |
| | | | |
| | | | |
| | | | |

PRIME CONSULTANT

BARRY BRYAN ASSOCIATES
Architects
Engineers
Project Managers
250 Water St.
Suite 201
Whitby, Ontario
L1N 0G5
Tel: (905) 666-5252
Fax: (905) 666-5256
e-mail: bba@bba-archeng.com

LICENSED PROFESSIONAL ENGINEER
H.D. COHEN
90414335
FEB09/2021
PROVINCE OF ONTARIO

SUB-CONSULTANT

HCC ENGINEERING
DESIGN AND TECHNOLOGY SERVICES GROUP
HCC ENGINEERING LIMITED
40 EGLINTON AVENUE EAST, SUITE 600
TORONTO, ONTARIO, M4P 3A2
Tel: (416) 932-2423

LICENSED PROFESSIONAL ENGINEER
X.P. CHEN
100219955
FEB09/2021
PROVINCE OF ONTARIO

HCC Project No.: 20104

| | | | |
|---|---|---|---|
| DESIGN BY: PC | | SCALE | AS SHOWN |
| DRAWN BY: TLR | | DATE: | 2020-05-01 |
| CHECKED BY: PC/HDC | | CONSULTANT PROJECT NO. | 20060 |
| APPROVED BY: HDC | | | |

CONTRACT REVISIONS

| NO. | DATE | NAME | REVISIONS |
|---|---|---|---|
| | | | |
| | | | |
| | | | |
| | | | |
| | | | |
| | | | |
| 2 | FEB09/2021 | HCC | ISSUED FOR PERMIT & TENDER |
| 1 | OCT30/2020 | HCC | ISSUED FOR 90% REVIEW |

DURHAM REGION

THE REGIONAL MUNICIPALITY OF DURHAM
WORKS DEPARTMENT
DESIGN, CONSTRUCTION & ASSET MANAGEMENT

# RELOCATION OF DENTAL CLINIC TO 200 JOHN ST., OSHAWA

## ELECTRICAL DETAILS

| PROPERTY NO. | FACILITY CODE | FACILITIES PROJECT NO. |
|---|---|---|
| N/A | LEA-0-07 | LEA-0-07-19-01 |
| CONTRACT NO. | DRAWING NO. | SHEET NO. |
| T-1032-2021 | E-007 | 040 |

F:\Projects 2020\20104\E-007E.dwg

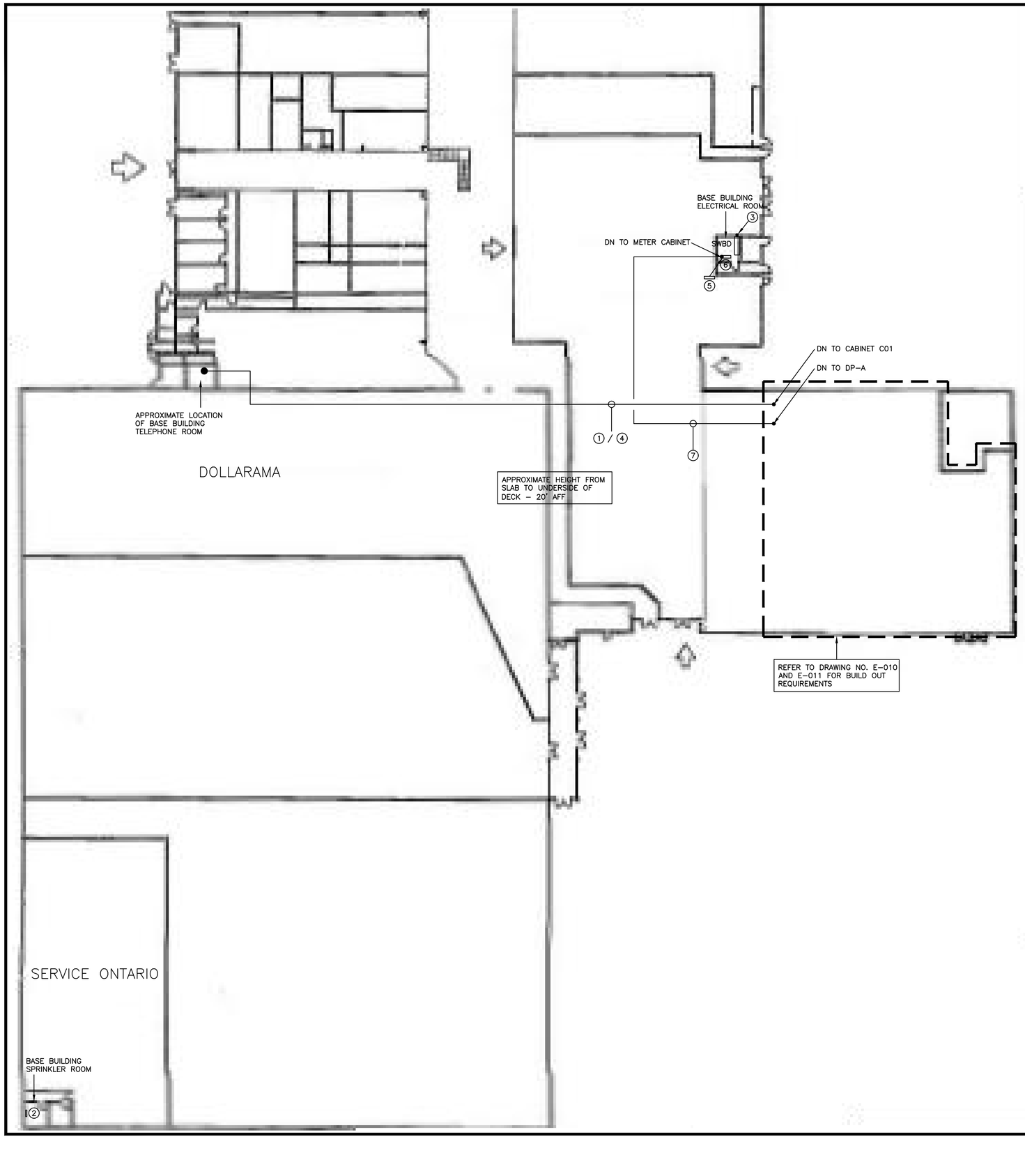


N–1 EXACT LOCATION OF ALL DEVICES AND RESPECTIVE HEIGHTS TO BE COORDINATED ON SITE WITH ARCHITECT.

N–2 ROUTING OF ALL SERVICES SHOWN IS APPROXIMATE. ELECTRICAL CONTRACTOR TO DETERMINE EXACT ROUTING AND DIMENSIONS ON SITE. OBTAIN PROPERTY MANAGEMENT APPROVAL AND STRUCTURAL ENGINEER'S APPROVAL PRIOR TO INSTALLATION OF PROPOSED ROUTING.

N–3 ROUTE ALL CONDUIT SYSTEMS AROUND BEAMS, DUCT WORK AND PIPING AS REQUIRED TO ACCOMMODATE INSTALLATION. REFER TO MECHANICAL DRAWINGS AND DESIGNER DRAWINGS FOR ADDITIONAL DETAILS.

N–4 POWER (FEEDER AND BRANCH CIRCUIT) CONDUITS AND SYSTEMS CONDUITS SHALL BE SUSPENDED FROM ROOF STRUCTURE. SUPPORT AT A MAXIMUM OF 5' INTERVALS. CONDUIT SUPPORT INFRASTRUCTURE SHALL BE SUBMITTED BY ELECTRICAL CONTRACTOR FOR REVIEW AND APPROVAL BY THE STRUCTURAL ENGINEER. AS A MINIMUM PROVIDE 1–5/8" X 3–1/4", 12 GAUGE BACK TO BACK SOLID UNISTRUT CHANNEL. CHANNEL MUST SPAN BETWEEN TWO (2) OWSJ. WHEN JOISTS ARE CROSSED, HANG DIRECTLY FROM EACH JOIST AT TWO POINTS. UTILIZE 5/8" THREADED ROD AND 5/8" DIAMETER HUS–H HILTI SCREW ANCHORS. SPAN ACROSS BEAMS AS REQUIRED.

1. APPROXIMATE ROUTING OF 1 1/4" CONDUIT FOR TELCO'S USE
2. EXISTING FIRE ALARM SYSTEM CONTROL PANEL
3. EXISTING SERVICE GROUND CONNECTION POINT
4. APPROXIMATE ROUTING OF 1" CONDUIT FOR FOR COMMUNICATIONS CONTRACTOR'S USE
5. EXISTING METER CABINET C/W METER BASE AND METER TO BE REMOVED AS PART OF THIS SCOPE OF WORK
6. METER CABINET PROVIDED AS PART OF THIS SCOPE OF WORK. REFER TO DRAWING NO. E–015 FOR ADDITIONAL REQUIREMENTS
7. APPROXIMATE ROUTING OF FEEDER (CONDUIT AND WIRES) PROVIDED AS PART OF THIS SCOPE OF WORK.

ALL MEASUREMENTS ARE TO BE VERIFIED BY THE CONTRACTOR ON SITE AND ANY DISCREPANCIES ARE TO BE REPORTED BEFORE PROCEEDING WITH THE WORK. THE REGION OF DURHAM ASSUMES NO RESPONSIBILITY FOR THE ACCURACY OF THE LOCATION OF EXISTING SERVICES AS INDICATED ON THIS DRAWING. DO NOT SCALE DRAWINGS.

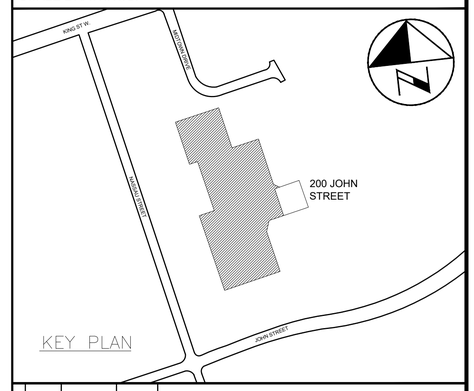


CONSULTANT REVISIONS

| NO. | DATE | NAME | REVISIONS |
|---|---|---|---|
| | | | |

PRIME CONSULTANT

BARRY BRYAN ASSOCIATES
Architects
Engineers
Project Managers
250 Water St.
Suite 201
Whitby, Ontario
L1N 0G5
Tel: (905) 666-5252
Fax: (905) 666-5256
e-mail: bba@bba-archeng.com

LICENSED PROFESSIONAL ENGINEER
H.D. COHEN
90414335
FEB09/2021
PROVINCE OF ONTARIO

SUB–CONSULTANT

HCC ENGINEERING
DESIGN AND TECHNOLOGY SERVICES GROUP
HCC ENGINEERING LIMITED
40 EGLINTON AVENUE EAST, SUITE 600
TORONTO, ONTARIO, M4P 3A2
Tel: (416) 932-2423

LICENSED PROFESSIONAL ENGINEER
X. P. CHEN
100219955
FEB09/2021
PROVINCE OF ONTARIO

HCC Project No.: 20104

| | |
|---|---|
| DESIGN BY: PC | SCALE 1:250 |
| DRAWN BY: TLR | DATE: 2020–05–01 |
| CHECKED BY: PC/HDC | CONSULTANT PROJECT NO. 20060 |
| APPROVED BY: HDC | |

CONTRACT REVISIONS

| NO. | DATE | NAME | REVISIONS |
|---|---|---|---|
| 3 | FEB09/2021 | HCC | ISSUED FOR PERMIT & TENDER |
| 2 | OCT30/2020 | HCC | ISSUED FOR 90% REVIEW |
| 1 | JUNE 1/20 | HCC | ISSUED FOR 60% REVIEW |

THE REGIONAL MUNICIPALITY OF DURHAM
WORKS DEPARTMENT
DESIGN, CONSTRUCTION & ASSET MANAGEMENT

# RELOCATION OF DENTAL CLINIC TO 200 JOHN ST., OSHAWA

## ELECTRICAL FACILITY PLAN

| PROPERTY NO. | FACILITY CODE | FACILITIES PROJECT NO. |
|---|---|---|
| N/A | LEA–O–07 | LEA–O–07–19–01 |
| CONTRACT NO. | DRAWING NO. | SHEET NO. |
| T–1032–2021 | E–008 | 041 |

F:\Projects 2020\20104\E-008E.dwg

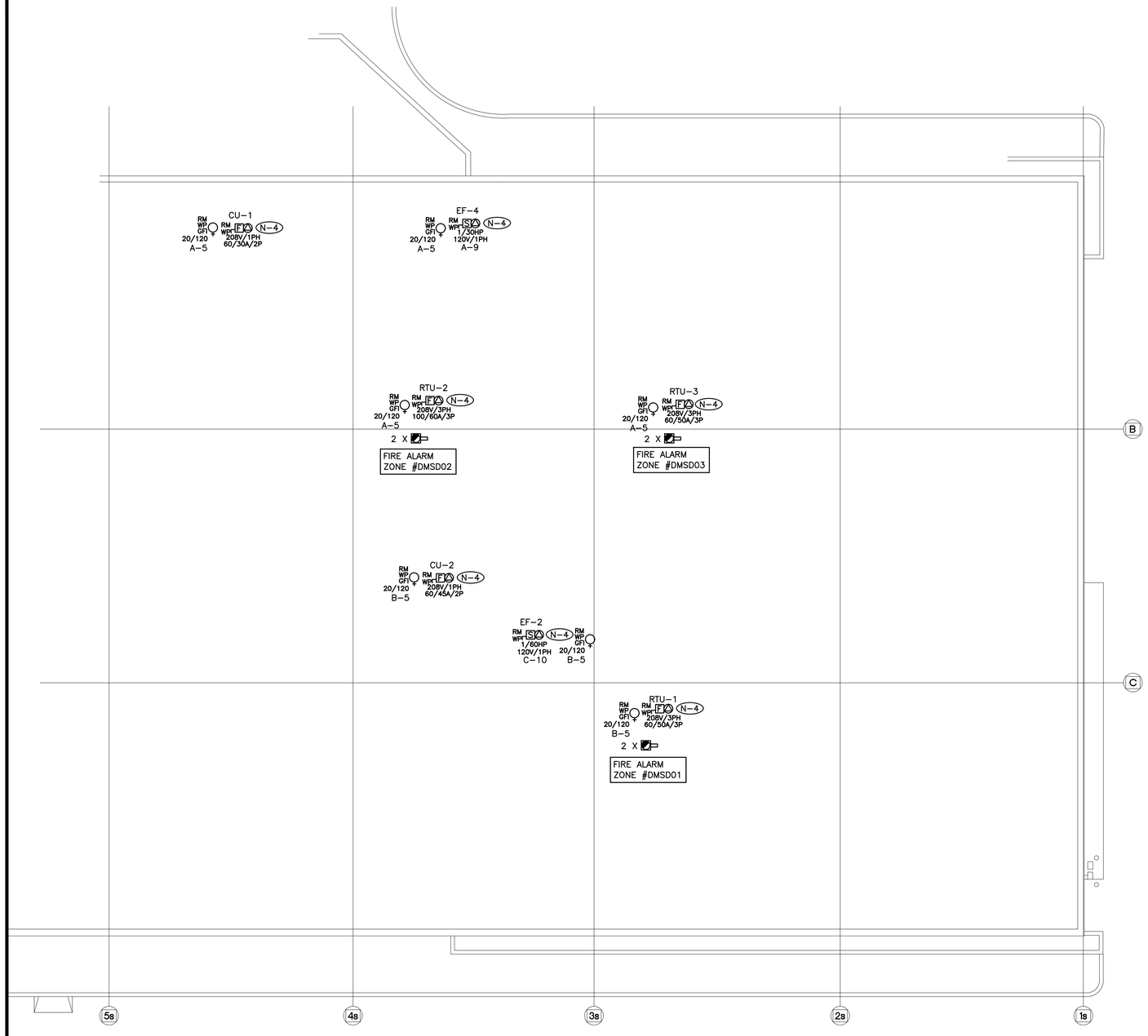


(N-1) EXACT LOCATION OF ALL DEVICES AND RESPECTIVE HEIGHTS TO BE COORDINATED ON SITE WITH ARCHITECT.

(N-2) NEATLY LABEL ALL FLOOR MOUNTED AND WALL DEVICE BOX COVERS WITH CORRESPONDING PANEL NAMES AND CIRCUIT NUMBERS. UTILIZE SELF ADHESIVE MECHANICALLY PRINTED LABELS.

(N-3) CIRCUIT NUMBERS MAY NOT BE CHANGED WITHOUT PRIOR APPROVAL FROM THE ELECTRICAL ENGINEER.

(N-4) CONFIRM BREAKER AND RECEPTACLE REQUIREMENTS PRIOR TO ORDERING DISTRIBUTION.

(N-5) CONFIRM BREAKER/FUSE AND RECEPTACLE/DISCONNECT REQUIREMENTS PRIOR TO INSTALLATION.

(N-6) COORDINATE WIRING REQUIREMENTS FOR MECHANICAL EQUIPMENT ON SITE WITH MECHANICAL CONTRACTOR.

(N-7) CONFIRM ELECTRICAL REQUIREMENTS AND EXACT LOCATION OF ALL MECHANICAL EQUIPMENT WITH MECHANICAL CONTRACTOR PRIOR TO INSTALLATION OF ELECTRICAL SERVICES.

(N-8) ALL FINAL CONNECTIONS TO MECHANICAL EQUIPMENT ARE TO BE IN LIQUID TIGHT FLEXIBLE CONDUIT.

(N-9) ROUTE ALL CONDUIT SYSTEMS AROUND BEAMS, DUCT WORK AND PIPING AS REQUIRED TO ACCOMMODATE INSTALLATION. REFER TO MECHANICAL DRAWINGS AND DESIGNER DRAWINGS FOR ADDITIONAL DETAILS.

(N-10) NOT USED.

(N-11) PROVIDE REQUIRED PENETRATIONS THROUGH BUILDING ENVELOPE. COORDINATE WORK AND WEATHERPROOF SEALING REQUIREMENTS WITH LANDLORD.

(N-12) MINIMUM WIRE SIZE #10AWG FOR ALL 120 VOLT CIRCUITS EXCEEDING 90 FEET IN LENGTH.

(N-13) MINIMUM WIRE SIZE #8AWG FOR ALL 120 VOLT CIRCUITS EXCEEDING 200 FEET IN LENGTH.

(N-14) USE PVC COATED GALVANIZED RIGID STEEL CONDUIT IN ALL OUTDOOR LOCATIONS AND IN AREAS THAT ARE NOT ENVIRONMENTALLY CONTROLLED.

(N-15) PROVIDE REQUIRED PENETRATIONS THROUGH BUILDING ENVELOP. COORDINATE WORK AND WEATHERPROOF SEALING REQUIREMENTS WITH LANDLORD.

ALL MEASUREMENTS ARE TO BE VERIFIED BY THE CONTRACTOR ON SITE AND ANY DISCREPANCIES ARE TO BE REPORTED BEFORE PROCEEDING WITH THE WORK. THE REGION OF DURHAM ASSUMES NO RESPONSIBILITY FOR THE ACCURACY OF THE LOCATION OF EXISTING SERVICES AS INDICATED ON THIS DRAWING. DO NOT SCALE DRAWINGS.

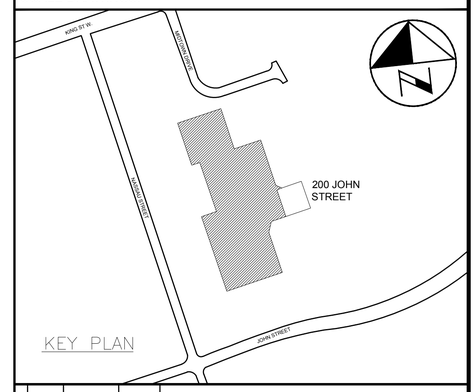


CONSULTANT REVISIONS

| NO. | DATE | NAME | REVISIONS |
|---|---|---|---|
| | | | |

PRIME CONSULTANT

BARRY BRYAN ASSOCIATES
Architects
Engineers
Project Managers
250 Water St.
Suite 201
Whitby, Ontario
L1N 0G5
Tel: (905) 666-5252
Fax: (905) 666-5256
e-mail: bba@bba-archeng.com

LICENSED PROFESSIONAL ENGINEER
H.D. COHEN
90414335
FEB09/2021
PROVINCE OF ONTARIO

SUB-CONSULTANT

HCC ENGINEERING
DESIGN AND TECHNOLOGY SERVICES GROUP
HCC ENGINEERING LIMITED
40 EGLINTON AVENUE EAST, SUITE 600
TORONTO, ONTARIO, M4P 3A2
Tel: (416) 932-2423

LICENSED PROFESSIONAL ENGINEER
X.P. CHEN
100219955
FEB09/2021
PROVINCE OF ONTARIO

HCC Project No.: 20104

| | |
|---|---|
| DESIGN BY: PC | SCALE 1:100 |
| DRAWN BY: TLR | DATE: 2020-05-01 |
| CHECKED BY: PC/HDC | CONSULTANT PROJECT NO. 20060 |
| APPROVED BY: HDC | |

CONTRACT REVISIONS

| NO. | DATE | NAME | REVISIONS |
|---|---|---|---|
| 3 | FEB09/2021 | HCC | ISSUED FOR PERMIT & TENDER |
| 2 | OCT30/2020 | HCC | ISSUED FOR 90% REVIEW |
| 1 | JUNE 1/20 | HCC | ISSUED FOR 60% REVIEW |

THE REGIONAL MUNICIPALITY OF DURHAM
WORKS DEPARTMENT
DESIGN, CONSTRUCTION & ASSET MANAGEMENT

# RELOCATION OF DENTAL CLINIC TO 200 JOHN ST., OSHAWA

## ELECTRICAL ROOF PLAN

| PROPERTY NO. | FACILITY CODE | FACILITIES PROJECT NO. |
|---|---|---|
| N/A | LEA-O-07 | LEA-O-07-19-01 |
| CONTRACT NO. | DRAWING NO. | SHEET NO. |
| T-1032-2021 | E-009 | 042 |

F:\Projects 2020\20104\E-009G.dwg

ALL WIRING, DEVICES AND EQUIPMENT WITHIN OPERATORY ROOMS, STERILIZATION ROOM AND DENTURIST LAB MUST COMPLY WITH ONTARIO ELECTRICAL SAFETY CODE SECTION 24.

OPERATORY ROOMS ARE PATIENT CARE AREAS. LEVEL OF CARE IS BASIC.

PLUG LOAD CONTROL NOT SPECIFIED FOR OPERATORY EQUIPMENT / AV EQUIPMENT / TV'S AS THIS CAN DAMAGE EQUIPMENT.

PROVIDE A DEDICATED GREEN INSULATED COPPER GROUND WIRE FOR EACH RECEPTACLE, DEVICE, LIGHT SWITCH, ETC., IN PATIENT CARE AREAS, OPERATORIES, ETC..

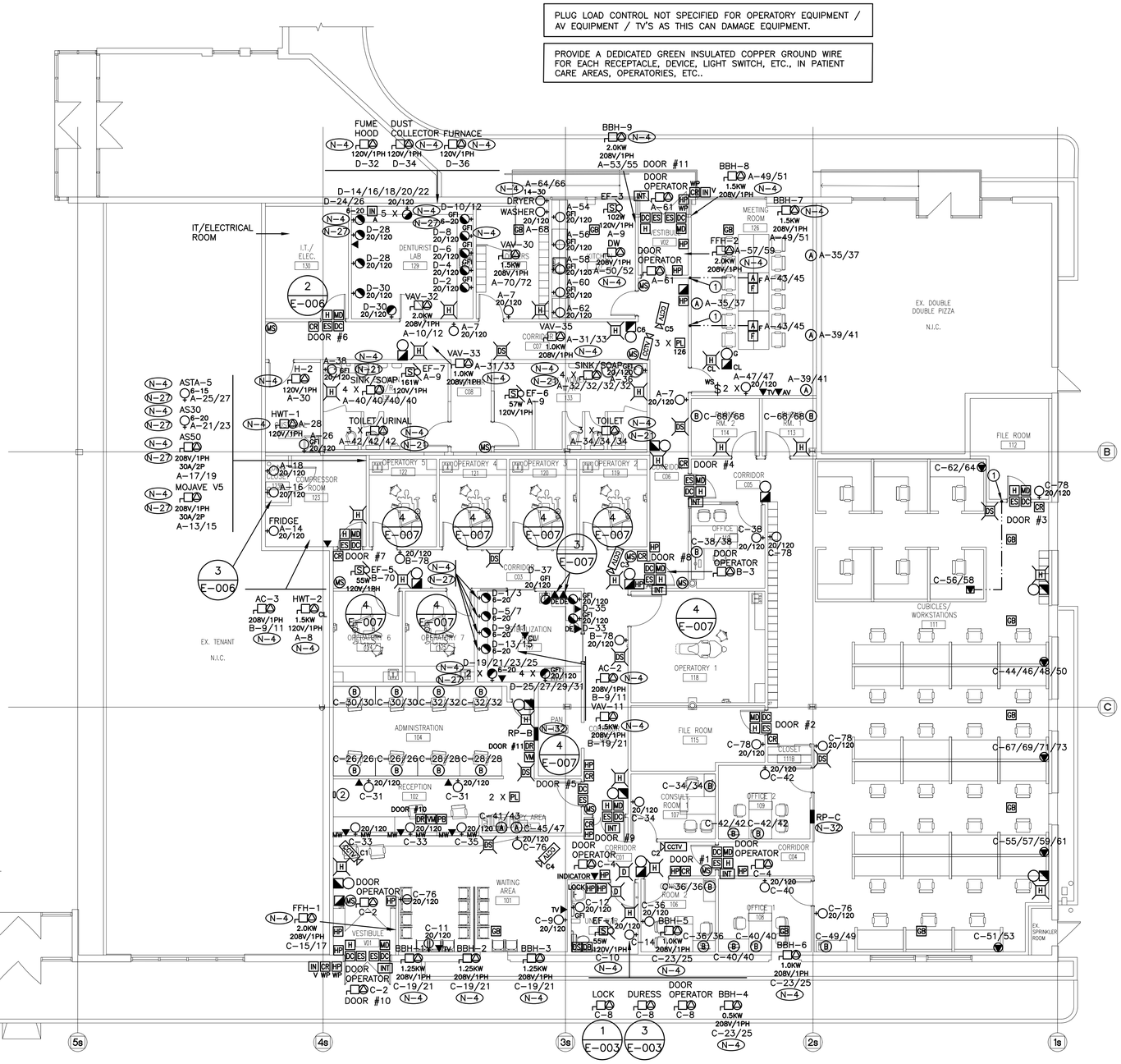


(N-1) EXACT LOCATION OF ALL DEVICES AND RESPECTIVE HEIGHTS TO BE COORDINATED ON SITE WITH ARCHITECT.

(N-2) NEATLY LABEL ALL FLOOR MOUNTED AND WALL DEVICE BOX COVERS WITH CORRESPONDING PANEL NAMES AND CIRCUIT NUMBERS. UTILIZE SELF ADHESIVE MECHANICALLY PRINTED LABELS.

(N-3) CIRCUIT NUMBERS MAY NOT BE CHANGED WITHOUT PRIOR APPROVAL FROM THE ELECTRICAL ENGINEER.

(N-4) CONFIRM BREAKER AND RECEPTACLE REQUIREMENTS PRIOR TO ORDERING DISTRIBUTION.

(N-5) MANUAL STARTER SWITCH/THERMOSTAT SUPPLIED BY MECHANICAL CONTRACTOR AND INSTALLED BY ELECTRICAL CONTRACTOR. PROVIDE CONDUIT AND WIRE.

(N-6) COORDINATE WIRING REQUIREMENTS FOR MECHANICAL EQUIPMENT ON SITE WITH MECHANICAL CONTRACTOR.

(N-7) CONFIRM ELECTRICAL REQUIREMENTS AND EXACT LOCATION OF ALL MECHANICAL EQUIPMENT WITH MECHANICAL CONTRACTOR PRIOR TO INSTALLATION OF ELECTRICAL SERVICES.

(N-8) ALL FINAL CONNECTIONS TO MECHANICAL EQUIPMENT ARE TO BE IN LIQUID TIGHT FLEXIBLE CONDUIT.

(N-9) ROUTE ALL CONDUIT SYSTEMS AROUND BEAMS, DUCT WORK AND PIPING AS REQUIRED TO ACCOMMODATE INSTALLATION. REFER TO MECHANICAL DRAWINGS AND DESIGNER DRAWINGS FOR ADDITIONAL DETAILS.

(N-10) NOT USED.

(N-11) ELECTRICAL CONTRACTOR SHALL NOT USE PULLBOXES AS SUBSTITUTES FOR 90° BENDS.

(N-12) ALL COMMUNICATIONS SYSTEM ZONE CONDUITS PROVIDED BY ELECTRICAL CONTRACTOR SHALL BE C/W PULL STRING. ALL CONDUITS SHALL BE C/W BUSHINGS AND RUBBERIZED GROMMETS. ALL CONDUITS TO BE EMT. EMT COUPLING AND CONNECTORS SHALL BE T&B STEEL, SET SCREW TYPE.

(N-13) COORDINATE CONDUIT TERMINATION WITH LIGHTING INSTALLATION AND MECHANICAL INTERFERENCES TO ENSURE ACCESS FOR COMMUNICATIONS CONTRACTOR.

(N-14) AS PART OF THE BASE BID PRICE ELECTRICAL CONTRACTOR SHALL PROVIDE (SUPPLY AND INSTALL) AN ADDITIONAL SIX (6) CSA 5-20R DUPLEX RECEPTACLES OVER AND ABOVE THOSE SHOWN ON DRAWING NO. E-010 ON AN AD HOC BASIS UP TO SUBSTANTIAL COMPLETION. EACH ADDITIONAL RECEPTACLE SHALL BE ON A DEDICATED CIRCUIT COMPLETE WITH BRANCH WIRING (CONDUIT AND WIRE) AND BREAKER. BREAKER REQUIREMENTS NOT INDICATED ON PANEL SCHEDULES.

PROVIDE RECEPTACLES, CONDUIT, WIRE (100' OF 2#10AWG + G (TOTAL OF 200' WIRE PLUS G AND 100' 3/4" CONDUIT) PER RECEPTACLE), BREAKERS, TERMINATION AT PANEL BREAKER END AND AT DEVICE END, ETC. FOR FULLY FUNCTIONAL LIVE DEVICES. EXACT INSTALLATION LOCATION AND PANEL SOURCE TO BE DETERMINED ON SITE BY CLIENT DURING CONSTRUCTION. PROVIDE UPDATED TYPED PANEL SCHEDULES FOR ALL PANELS AT THE COMPLETION OF THE PROJECT.

(N-15) ALL DEVICES, FIXTURES, FIRE ALARM DEVICES, SYSTEMS, ETC. MUST BE WIRED SUCH THAT ACCESS PANELS ARE NOT REQUIRED IN DRYWALL CEILING AREAS.

(N-16) CONFIRM BREAKER/FUSE AND RECEPTACLE/DISCONNECT REQUIREMENTS PRIOR TO INSTALLATION.

(N-17) NOT USED.

(N-18) NOT USED.

(N-19) PROVIDE REQUIRED PENETRATIONS THROUGH BUILDING ENVELOPE. COORDINATE WORK AND WEATHERPROOF SEALING REQUIREMENTS WITH LANDLORD.

(N-20) EXTEND ALL COMMUNICATIONS ZONE CONDUITS PROVIDED AS PART OF THIS SCOPE OF WORK AND ALL A/V ZONE CONDUITS PROVIDED AS PART OF THIS SCOPE OF WORK IN EXPOSED CEILING AREAS AND DRYWALL CEILING AREAS TO T-BAR CEILING AREAS WITHIN TENANT SPACE.

(N-21) PROVIDE 120/24V TRANSFORMER FOR EACH APPLIANCE SENSOR (SENSOR PROVIDED BY DIVISION 15).

(N-22) MINIMUM WIRE SIZE #10AWG FOR ALL 120 VOLT CIRCUITS EXCEEDING 90 FEET IN LENGTH.

(N-23) MINIMUM WIRE SIZE #8AWG FOR ALL 120 VOLT CIRCUITS EXCEEDING 200 FEET IN LENGTH.

(N-24) ELECTRICAL CONTRACTOR TO ENSURE THAT DEVICES ARE NOT INSTALLED ON WALLS WITH WHITE BOARDS OR ON FEATURE WALLS. CONFIRM ALL WHITE BOARD AND FEATURE WALL LOCATIONS PRIOR TO INSTALLATION.

(N-25) PROVIDE TEN (10) DUPLEX RECEPTACLES IN CEILING SPACE ON AN AD HOC BASIS FOR CONTROL CONTRACTOR'S USE. UTILIZE CCTS #RP-A-76/78/80/82/84 AND RP-B-33/35/37/39/41. COORDINATE LOCATION OF RECEPTACLES ON SITE WITH CONTROLS CONTRACTOR. BID PRICE SHALL INCLUDE FOR 100' OF 2#10AWG + G (TOTAL OF 200' WIRE PLUS G) AND 100' 3/4" CONDUIT PER CONTROL CIRCUIT.

(N-26) NOT USED.

(N-27) CONNECT 220 VOLT DEVICES TO 120/208V CIRCUITS UTILIZING BUCK & BOOST TRANSFORMERS UNLESS INDICATED OTHERWISE. TRANSFORMERS TO BE SUPPLIED BY DENTAL EQUIPMENT CONTRACTOR AND INSTALLED BY ELECTRICAL CONTRACTOR. MOUNT TRANSFORMERS IN CLOSE PROXIMITY TO DEVICE INDICATED AS PART OF THIS CONTRACT.

(N-28) PROVIDE LOCKONS FOR BREAKERS PROTECTING EMERGENCY LIGHTING CIRCUITS AND FIRE ALARM SYSTEM CIRCUITS.

(N-29) SAW CUTTING OF FLOOR SLAB PROVIDED BY ELECTRICAL CONTRACTOR. EXACT ROUTING TO BE DETERMINED BY SCANNING/X-RAY RESULTS. SUBMIT LAYOUT C/W CONDUIT SIZES TO ELECTRICAL CONSULTANT FOR APPROVAL PRIOR TO CUTTING OF FLOOR SLAB.

(N-30) ENSURE A MINIMUM DISTANCE OF SEPARATION OF 5' BETWEEN POWER FEEDERS AND COMMUNICATIONS CONDUIT SYSTEMS.

(N-31) NOT USED.

(N-32) PROVIDE THREE (3) SPARE 1 1/4"C TO CEILING SPACE C/W PULLSTRING FOR FUTURE BRANCH WIRING.

(1) APPROXIMATE LOCATION TO TRANSITION SERVICES FROM FLOOR SLAB TO CEILING SPACE.

(2) AUTOMATED EXTERNAL DEFIBRILLATOR (AED) SUPPLIED BY THE CLIENT AND INSTALLED BY THE ELECTRICAL CONTRACTOR.

FIRE ALARM SYSTEM AUDIBILITY TESTING TO BE COMPLETED WITH ALL DOORS OPEN

——·——·—— DENOTES SERVICES PROVIDED AS PART OF THIS SCOPE OF WORK ROUTED THROUGH EXISTING FLOOR SLAB. REFER TO DETAIL NO. 3 ON DRAWING NO. E-004 FOR ADDITIONAL REQUIREMENTS.

ALL MEASUREMENTS ARE TO BE VERIFIED BY THE CONTRACTOR ON SITE AND ANY DISCREPANCIES ARE TO BE REPORTED BEFORE PROCEEDING WITH THE WORK. THE REGION OF DURHAM ASSUMES NO RESPONSIBILITY FOR THE ACCURACY OF THE LOCATION OF EXISTING SERVICES AS INDICATED ON THIS DRAWING. DO NOT SCALE DRAWINGS.

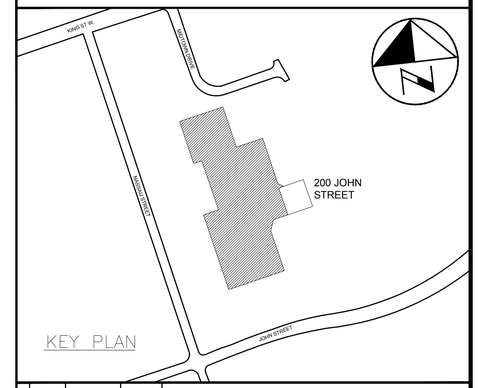


CONSULTANT REVISIONS

| NO. | DATE | NAME | REVISIONS |
|---|---|---|---|

PRIME CONSULTANT

BARRY BRYAN ASSOCIATES
Architects
Engineers
Project Managers
250 Water St.
Suite 201
Whitby, Ontario
L1N 0J5
Tel: (905) 666-5252
Fax: (905) 666-5256
e-mail: bba@bba-arcneng.com

LICENSED PROFESSIONAL ENGINEER H.D. COHEN 90414335 FEB09/2021 PROVINCE OF ONTARIO

SUB-CONSULTANT

HCC ENGINEERING
DESIGN AND TECHNOLOGY SERVICES GROUP
HCC ENGINEERING LIMITED
40 EGLINTON AVENUE EAST, SUITE 600
TORONTO, ONTARIO, M4P 3A2
Tel: (416) 932-2423

HCC Project No.: 20104

LICENSED PROFESSIONAL ENGINEER X.P. CHEN 100219955 FEB09/2021 PROVINCE OF ONTARIO

| | | | |
|---|---|---|---|
| DESIGN BY: | PC | SCALE | 1:100 |
| DRAWN BY: | TLR | DATE: | 2020-05-01 |
| CHECKED BY: | PC/HDC | CONSULTANT PROJECT NO. | 20060 |
| APPROVED BY: | HDC | | |

CONTRACT REVISIONS

| NO. | DATE | NAME | REVISIONS |
|---|---|---|---|
| 3 | FEB09/2021 | HCC | ISSUED FOR PERMIT & TENDER |
| 2 | OCT30/2020 | HCC | ISSUED FOR 90% REVIEW |
| 1 | JUNE 1/20 | HCC | ISSUED FOR 60% REVIEW |

DURHAM REGION

THE REGIONAL MUNICIPALITY OF DURHAM
WORKS DEPARTMENT
DESIGN, CONSTRUCTION & ASSET MANAGEMENT

# RELOCATION OF DENTAL CLINIC TO 200 JOHN ST., OSHAWA

## ELECTRICAL PLAN

| PROPERTY NO. | FACILITY CODE | FACILITIES PROJECT NO. |
|---|---|---|
| N/A | LEA-O-07 | LEA-O-07-19-01 |
| CONTRACT NO. | DRAWING NO. | SHEET NO. |
| T-1032-2021 | E-010 | 043 |

F:\Projects 2020\2010\E-010F.dwg

OCCUPANCY SENSORS FOR AUTOMATIC SHUT OFF OF LIGHTING WITHIN OPERATORIES HAVE NOT BEEN SPECIFIED AS LIGHTING DURING ROOM USE CANNOT BE INTERRUPTED FOR SAFETY REASONS.

ALL WIRING, DEVICES AND EQUIPMENT WITHIN OPERATORY ROOMS, STERILIZATION ROOM AND DENTURIST LAB MUST COMPLY WITH ONTARIO ELECTRICAL SAFETY CODE SECTION 24

- (N-1) REFER TO ARCHITECTS DRAWINGS FOR EXACT LOCATION AND HEIGHTS FOR MOUNTING OF FIXTURES, OCCUPANCY SENSORS, PHOTOCELL SENSORS, LIGHT SWITCHES, FIRE ALARM DEVICES, ETC.
- (N-2) PROVIDE NEW LIGHTING FIXTURES, EXIT SIGNS, SWITCHES, OCCUPANCY SENSORS, PHOTOCELL SENSORS, FIRE ALARM DEVICES, ETC. TO SUIT NEW REFLECTED CEILING PLAN.
- (N-3) COORDINATE INSTALLATION OF FIXTURES WITH MECHANICAL EQUIPMENT, ELECTRICAL EQUIPMENT, SPRINKLERS AND DUCT WORK.
- (N-4) CHAIN HANG ALL FIXTURES PROVIDED AS PART OF THIS SCOPE OF WORK IN FINISHED CEILING AREAS ABOVE FROM SLAB (RETROFIT FIXTURES ACCORDINGLY).
- (N-5) ELECTRICAL CONTRACTOR TO ENSURE THAT DEVICES ARE NOT INSTALLED ON WALLS WITH WHITE BOARDS, MONITORS OR ON FEATURE WALLS. CONFIRM WHITE BOARD, MONITOR AND FEATURE WALL LOCATIONS PRIOR TO INSTALLATION.
- (N-6) PROVIDE LOCK ON FOR BREAKERS PROTECTING EMERGENCY LIGHTING SYSTEMS / CIRCUITS.
- (N-7) MOUNTING STYLE (CEILING/WALL), HEIGHT AND LOCATION OF EXIT SIGNS TO BE DETERMINED BY ARCHITECT ON SITE. COORDINATE AND REVIEW ALL EXIT SIGN LOCATIONS WITH DESIGNER PRIOR TO ORDERING EXIT SIGNS.
- (N-8) LOCATE AND POSITION EXIT SIGNS SUCH THAT THEY DO NOT INTERFERE WITH ADJACENT EXIT SIGNS AND EMERGENCY LIGHTING COVERAGE.
- (N-9) AS PART OF THE BASE BID PRICE ELECTRICAL CONTRACTOR SHALL PROVIDE (SUPPLY AND INSTALL) AN ADDITIONAL FOUR (4) TYPE E1 EXIT SIGNS EACH COMPLETE WITH 75'-0" OF CONDUIT AND WIRING OVER AND ABOVE THOSE SHOWN ON DRAWING NO. E-011 POST CITY FIRE / BUILDING DEPARTMENT INSPECTIONS.
- (N-10) ALL DEVICES, FIXTURES, FIRE ALARM DEVICES, SYSTEMS, ETC. MUST BE WIRED SUCH THAT ACCESS PANELS ARE NOT REQUIRED IN DRYWALL CEILING AREAS.
- (N-11) NOT USED.
- (N-12) ALL EXIT SIGNS TYPE 'E1' UNLESS INDICATED OTHERWISE.
- (N-13) ALL SWITCHES PROVIDED AS PART OF THIS SCOPE OF WORK TO BE ALIGNED WITH THERMOSTATS.
- (N-14) AS-BUILT DRAWINGS MUST DETAIL THE ZONING AND CIRCUIT NUMBERS OF ALL FIXTURES THROUGHOUT ENTIRE FLOOR.
- (N-15) SWITCH/DIMMING LEGS SHALL BE WIRED SUCH THAT LEG IS CONTROLLED BY OCCUPANCY SENSORS IN RESPECTIVE SPACE ENCLOSED BY CEILING HEIGHT PARTITIONS. OPERATION OF SAME LIGHT BRANCH CIRCUIT IN ADJACENT AREAS/ROOMS SHALL NOT AFFECT OPERATION OF LIGHTING IN RESPECTIVE AREA.
- (N-16) PROVIDE A LOCAL 120V DISCONNECT FOR EACH BALLAST/DRIVER IN EACH FIXTURE PROVIDED AS PART OF THIS SCOPE OF WORK.
- (N-17) UTILIZE CCT #RP-B-18 AND RP-C-18 (DC SOURCES M1 AND M2 RESPECTIVELY) TO POWER EXIT SIGN AC BULBS AND NON-SWITCHED NIGHT LIGHTING.
- (N-18) NOT USED.
- (N-19) CEILING MOUNTED OCCUPANCY SENSORS PROVIDED AS PART OF THIS SCOPE OF WORK MUST BE INSTALLED AT LEAST 6' AWAY FROM ALL SUPPLY AIR DIFFUSERS AND RETURN AIR GRILLS. COORDINATE EXACT INSTALLATION LOCATION WITH LIGHTING CONTROL SERVICE CONSULTANT AND MECHANICAL CONTRACTOR PRIOR TO COMMENCING WORK.
- (N-20) CEILING MOUNTED OCCUPANCY SENSORS IN ROOMS WITH DLM CONTROL TO BE PROGRAMMED SUCH THAT THE FUNCTION OF AUTO-ON IS DISABLED. ALL LIGHT FIXTURES WITHIN RESPECTIVE ENCLOSED SPACES SHALL BE TURNED ON MANUALLY THROUGH LOW VOLTAGE OVERRIDE SWITCHES PROVIDED AS PART OF THIS SCOPE OF WORK UNLESS INDICATED OTHERWISE.
- (N-21) AS PART OF THIS SCOPE OF WORK ELECTRICAL CONTRACTOR TO HAVE LIGHTING CONTROL SYSTEM SERVICE CONSULTANT ONSITE AFTER LIGHTING AND HVAC INSTALLATION IS COMPLETE AND PRIOR TO INSTALLATION OF SENSORS PROVIDED AS PART OF THIS SCOPE OF WORK TO CONFIRM PLACEMENT OF SENSORS.
- (N-22) EACH AND EVERY SPACE ENCLOSED BY CEILING HEIGHT PARTITIONS (IE. OFFICES, MEETING ROOMS, ENCLAVES, ETC.) WITH DLM CONTROL TO BE WIRED WITH TWO CONTROLLABLE SWITCH-LEGS SUCH THAT THERE IS ONE CONTROL STEP OF NOT MORE THAN 50% LIGHTING POWER IN ADDITION TO AN AUTO OFF IN THE RESPECTIVE SPACE. REFER TO ASHRAE 90.1 2013 FOR ADDITIONAL REQUIREMENTS.
- (N-24) AS PART OF THE BASE BID PRICE ELECTRICAL CONTRACTOR SHALL PROVIDE (SUPPLY AND INSTALL) AN ADDITIONAL FOUR (4) DIGITAL DIMMING ROOM CONTROLLERS OVER AND ABOVE THOSE SHOWN ON DRAWING NO. E-011 ON AN AD HOC BASIS UP TO SUBSTANTIAL COMPLETION.

  PROVIDE WATTSTOPPER LMRC-212 OR APPROVED EQUAL C/W 25' DLM CAT6 NETWORK CABLE, CONDUIT, WIRE (50' OF 2#12AWG + G (TOTAL OF 100' WIRE PLUS G, 50' CONDUIT) PER ROOM CONTROLLER), TERMINATIONS, ETC. FOR FULLY FUNCTIONAL LIVE DEVICES. EXACT INSTALLATION LOCATION AND SWITCH LEGS TO BE DETERMINED ON SITE DURING CONSTRUCTION.
- (N-25) AS PART OF THE BASE BID PRICE ELECTRICAL CONTRACTOR SHALL PROVIDE (SUPPLY AND INSTALL) AN ADDITIONAL FOUR (4) TYPE 'A' CEILING MOUNTED OCCUPANCY SENSORS EACH COMPLETE WITH 75'-0" OF CONDUIT AND WIRING AND A LMSW-102 DIGITAL LIGHT SWITCH OR APPROVED EQUAL OVER AND ABOVE THOSE SHOWN ON DRAWING NO. E-011 POST SUBSTANTIAL COMPLETION.
- (N-26) AS PART OF THIS SCOPE OF WORK EMPLOY AND PAY FOR THE SERVICES OF A CERTIFIED LIGHTING CONTROL SYSTEM SERVICE CONSULTANT TO COMMISSION ALL CEILING MOUNTED OCCUPANCY SENSORS PROVIDED AS PART OF THIS SCOPE OF WORK. COMMISSIONING AND DOCUMENTATION SHALL BE COMPLETED; DETAILED AS REQUIRED TO DEMONSTRATE LEED COMPLIANCE.
- (N-27) AS PART OF THIS SCOPE OF WORK ELECTRICAL CONTRACTOR TO HAVE LIGHTING CONTROL SYSTEM SERVICE CONSULTANT ONSITE AFTER LIGHTING AND HVAC INSTALLATION IS COMPLETE AND PRIOR TO INSTALLATION OF SENSORS PROVIDED AS PART OF THIS SCOPE OF WORK TO CONFIRM PLACEMENT OF SENSORS.

DIMMER SCHEDULE

| DIMMER ZONE | DIMMER TYPE |
|---|---|
| DIM A | DLM |
| DIM B | DLM |
| DIM C | DLM |

0 TO 10VDC DLM DIMMER – WATTSTOPPER DLM LMDM-101 OR APPROVED EQUAL
0 TO 10VDC DIMMER – GREENGATE SF10P-W OR APPROVED EQUAL
120 VOLT REVERSE PHASE DIMMER – LUTRON DIVA SERIES OR APPROVED EQUAL

REFER TO DETAIL NO. 3 ON DRAWING NO. E-005 FOR FIXTURE SCHEDULE

ALL MEASUREMENTS ARE TO BE VERIFIED BY THE CONTRACTOR ON SITE AND ANY DISCREPANCIES ARE TO BE REPORTED BEFORE PROCEEDING WITH THE WORK. THE REGION OF DURHAM ASSUMES NO RESPONSIBILITY FOR THE ACCURACY OF THE LOCATION OF EXISTING SERVICES AS INDICATED ON THIS DRAWING. DO NOT SCALE DRAWINGS.

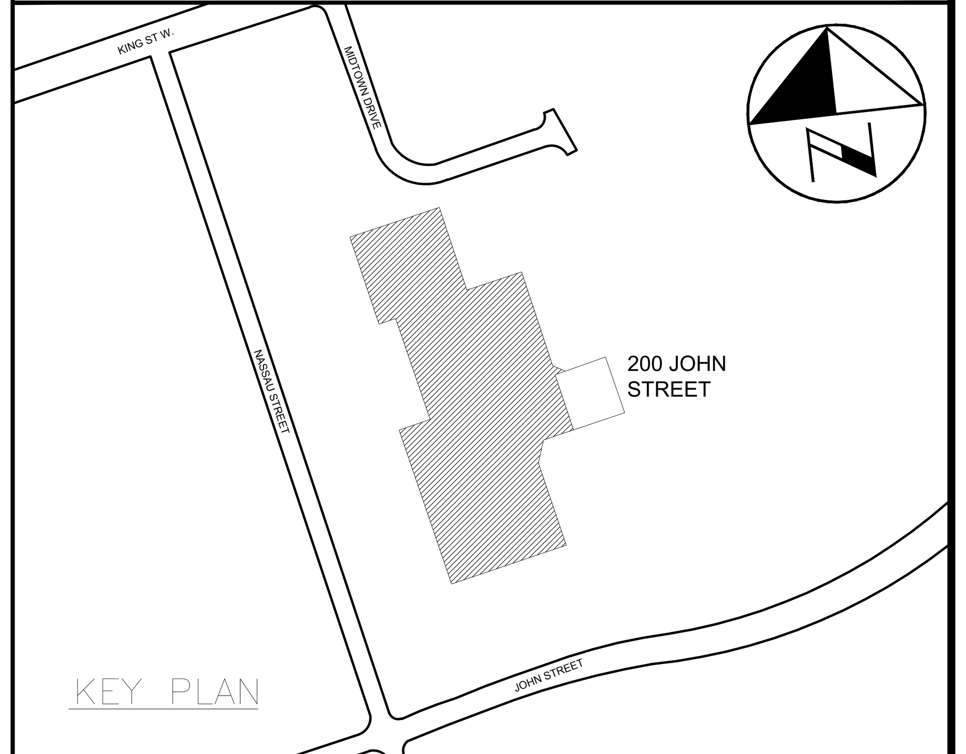


KEY PLAN

CONSULTANT REVISIONS

| NO. | DATE | NAME | REVISIONS |
|---|---|---|---|

PRIME CONSULTANT


BARRY BRYAN ASSOCIATES
Architects
Engineers
Project Managers
250 Water St.
Suite 201
Whitby, Ontario
L1N 0G5
Tel: (905) 666-5252
Fax: (905) 666-5256
e-mail: bba@bba-archeng.com


LICENSED PROFESSIONAL ENGINEER H.D. COHEN 90414335 FEB09/2021 PROVINCE OF ONTARIO

SUB-CONSULTANT


HCC ENGINEERING
DESIGN AND TECHNOLOGY SERVICES GROUP
HCC ENGINEERING LIMITED
40 EGLINTON AVENUE EAST, SUITE 600
TORONTO, ONTARIO, M4P 3A2
Tel: (416) 932-2423


LICENSED PROFESSIONAL ENGINEER X. P. CHEN 100219955 FEB09/2021 PROVINCE OF ONTARIO

HCC Project No.: 20104

| | | | |
|---|---|---|---|
| DESIGN BY: | PC | SCALE | 1:100 |
| DRAWN BY: | TLR | DATE: | 2020-05-01 |
| CHECKED BY: | PC/HDC | CONSULTANT PROJECT NO. | 20060 |
| APPROVED BY: | HDC | | |

CONTRACT REVISIONS

| NO. | DATE | NAME | REVISIONS |
|---|---|---|---|
| 3 | FEB09/2021 | HCC | ISSUED FOR PERMIT & TENDER |
| 2 | OCT30/2020 | HCC | ISSUED FOR 90% REVIEW |
| 1 | JUNE 1/20 | HCC | ISSUED FOR 60% REVIEW |

DURHAM REGION

THE REGIONAL MUNICIPALITY OF DURHAM
WORKS DEPARTMENT
DESIGN, CONSTRUCTION & ASSET MANAGEMENT

# RELOCATION OF DENTAL CLINIC TO 200 JOHN ST., OSHAWA

## REFLECTED CEILING PLAN

| PROPERTY NO. | FACILITY CODE | FACILITIES PROJECT NO. |
|---|---|---|
| N/A | LEA-O-07 | LEA-O-07-19-01 |
| CONTRACT NO. | DRAWING NO. | SHEET NO. |
| T-1032-2021 | E-011 | 044 |

F:\Projects 2020\20104\E-011F.dwg

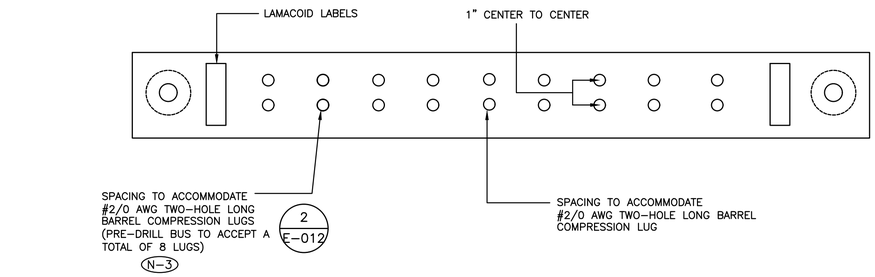


N-1 COVER TIPS, LUGS AND COPPER GROUND BAR WITH "PENETROX E" FROM "BURNDY" OR "KOPR-SHIELD" FROM "T&B".

N-2 INSTALL 2-HOLE LONG COMPRESSION LUGS FOR GROUND CONDUCTORS C/W DURIUM BOLTS, NUTS AND WASHERS.

N-3 BUS BAR SHALL BE PRE-DRILLED BY THE MANUFACTURER TO MATCH PATTERN INDICATED. FIELD DRILLING IS NOT ACCEPTABLE.

N-4 FASTEN BUS BAR TO FIRE RATED PLYWOOD BACKBOARD AT HIGH LEVEL (BACKBOARD PROVIDED AS PART OF THIS SCOPE OF WORK).

1 E-012 TELECOMMUNICATIONS GROUND BUS BAR (TGBB) DETAIL
SCALE: NTS

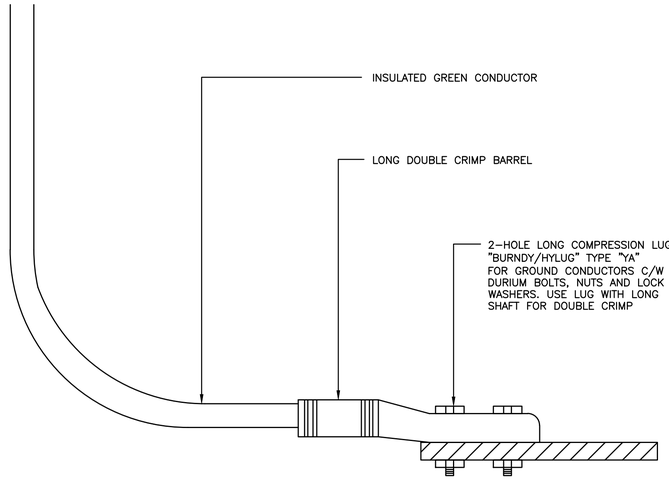


N-1 UTILIZE 2-HOLE LONG COMPRESSION LUGS FOR ALL CONNECTIONS TO BUS BARS AND TO ALL EQUIPMENT, CABINETS, RACKS, ETC.

2 E-012 GROUND LUG DETAIL
SCALE: NTS

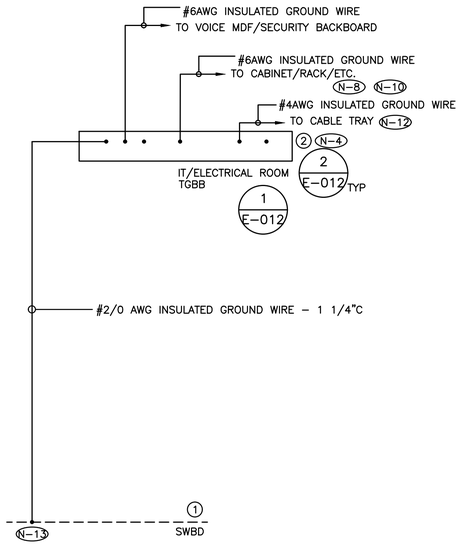


N-1 RISER IS DIAGRAMMATIC ONLY. REFER TO DRAWING NO. E-008 AND E-010 FOR QUANTITY AND LOCATION OF ALL BUS BARS AND GROUNDING CONNECTIONS.

N-2 SIZE ALL NEUTRAL SYSTEM GROUNDS IN ACCORDANCE WITH THE ELECTRICAL SAFETY CODE AND AUTHORITY HAVING JURISDICTION.

N-3 GROUNDING AND BONDING OF ALL EQUIPMENT NOT SHOWN ON THIS DETAIL SHALL BE COMPLETED IN ACCORDANCE WITH THE ELECTRICAL SAFETY CODE AND AUTHORITY HAVING JURISDICTION.

N-4 LABEL EACH AND EVERY GROUNDING CIRCUIT AT GROUND BAR END UTILIZING PANDUIT TELECOMMUNICATIONS GROUNDING AND BONDING CONDUCTOR LABEL KIT LTYK.

N-5 ELECTRICAL CONTRACTOR TO REVIEW GROUNDING SYSTEM PROVIDED AS PART OF THIS SCOPE OF WORK AND BASE BUILDING CONNECTION POINTS WITH ESA INSPECTOR PRIOR TO CONSTRUCTION.

N-6 NOT USED.

N-7 NOT USED.

N-8 PROVIDE A GROUNDING CIRCUIT TO EACH EQUIPMENT CABINET, RACK, ETC. DO NOT DAISY CHAIN GROUNDING CIRCUITS BETWEEN CABINETS, RACKS, ETC. REFER TO FLOOR PLANS FOR QUANTITY AND LOCATION OF EQUIPMENT CABINETS, RACKS, ETC.

N-9 PROVIDE DEDICATED CORE DRILLED WALL AND FLOOR PENETRATIONS. EXACT LOCATION OF ALL CORE DRILLS TO BE DETERMINED BY X-RAY RESULTS.

N-10 SCRAPE OFF PAINT AT RACK/CABINET END PRIOR TO INSTALLING GROUND LUG.

N-11 NOT USED.

N-12 PROVIDE FLEXIBLE COPPER JUMPERS BETWEEN EACH SECTION OF CABLE TRAY.

N-13 PROVIDE CADWELD CONNECTION TO SWITCHBOARD GROUND.

1 EXISTING SERVICE GROUND CONNECTION POINT AT SWBD IN BASE BUILDING ELECTRICAL ROOM

2 1/4" X 3" X 24" TELECOMMUNICATIONS GROUND BUS BAR (TGBB)

——————— DENOTES NEW PROVIDED BY ELECTRICAL CONTRACTOR

- - - - - - - - - DENOTES EXISTING TO REMAIN

⨯ —⨯— ⨯ —⨯— ⨯ DENOTES EXISTING TO BE REMOVED BY ELECTRICAL CONTRACTOR

3 E-012 GROUNDING SYSTEM RISER DIAGRAM
SCALE: NTS

ALL MEASUREMENTS ARE TO BE VERIFIED BY THE CONTRACTOR ON SITE AND ANY DISCREPANCIES ARE TO BE REPORTED BEFORE PROCEEDING WITH THE WORK. THE REGION OF DURHAM ASSUMES NO RESPONSIBILITY FOR THE ACCURACY OF THE LOCATION OF EXISTING SERVICES AS INDICATED ON THIS DRAWING. DO NOT SCALE DRAWINGS.

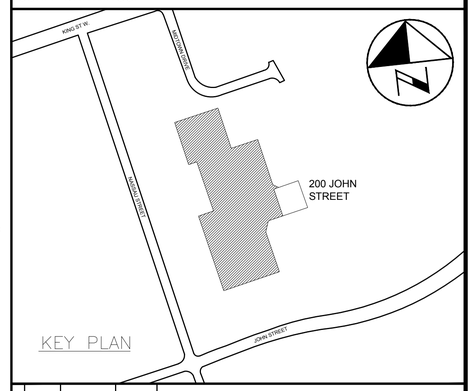


CONSULTANT REVISIONS

| NO. | DATE | NAME | REVISIONS |
|---|---|---|---|
| | | | |
| | | | |
| | | | |
| | | | |
| | | | |
| | | | |
| | | | |
| | | | |

PRIME CONSULTANT

BARRY BRYAN ASSOCIATES
Architects
Engineers
Project Managers
250 Water St.
Suite 201
Whitby, Ontario
L1N 0G6
Tel: (905) 666-5252
Fax: (905) 666-5256
e-mail: bba@bba-archeng.com

LICENSED PROFESSIONAL ENGINEER H.D. COHEN 90414335 FEB09/2021 PROVINCE OF ONTARIO

SUB-CONSULTANT

HCC ENGINEERING
DESIGN AND TECHNOLOGY SERVICES GROUP
HCC ENGINEERING LIMITED
40 EGLINTON AVENUE EAST, SUITE 600
TORONTO, ONTARIO, M4P 3A2
Tel: (416) 932-2423

LICENSED PROFESSIONAL ENGINEER X. P. CHEN 100219555 FEB09/2021 PROVINCE OF ONTARIO

HCC Project No.: 20104

| | |
|---|---|
| DESIGN BY: PC | SCALE AS SHOWN |
| DRAWN BY: TLR | DATE: 2020-05-01 |
| CHECKED BY: PC/HDC | CONSULTANT PROJECT NO. 20060 |
| APPROVED BY: HDC | |

CONTRACT REVISIONS

| NO. | DATE | NAME | REVISIONS |
|---|---|---|---|
| | | | |
| | | | |
| | | | |
| | | | |
| | | | |
| 3 | FEB09/2021 | HCC | ISSUED FOR PERMIT & TENDER |
| 2 | OCT30/2020 | HCC | ISSUED FOR 90% REVIEW |
| 1 | JUNE 1/20 | HCC | ISSUED FOR 60% REVIEW |

THE REGIONAL MUNICIPALITY OF DURHAM
WORKS DEPARTMENT
DESIGN, CONSTRUCTION & ASSET MANAGEMENT

# RELOCATION OF DENTAL CLINIC TO 200 JOHN ST., OSHAWA

## ELECTRICAL GROUNDING SYSTEM DETAILS

| PROPERTY NO. | FACILITY CODE | FACILITIES PROJECT NO. |
|---|---|---|
| N/A | LEA-O-07 | LEA-O-07-19-01 |
| CONTRACT NO. | DRAWING NO. | SHEET NO. |
| T-1032-2021 | E-012 | 045 |

F:\Projects 2020\20104\E-012D.dwg

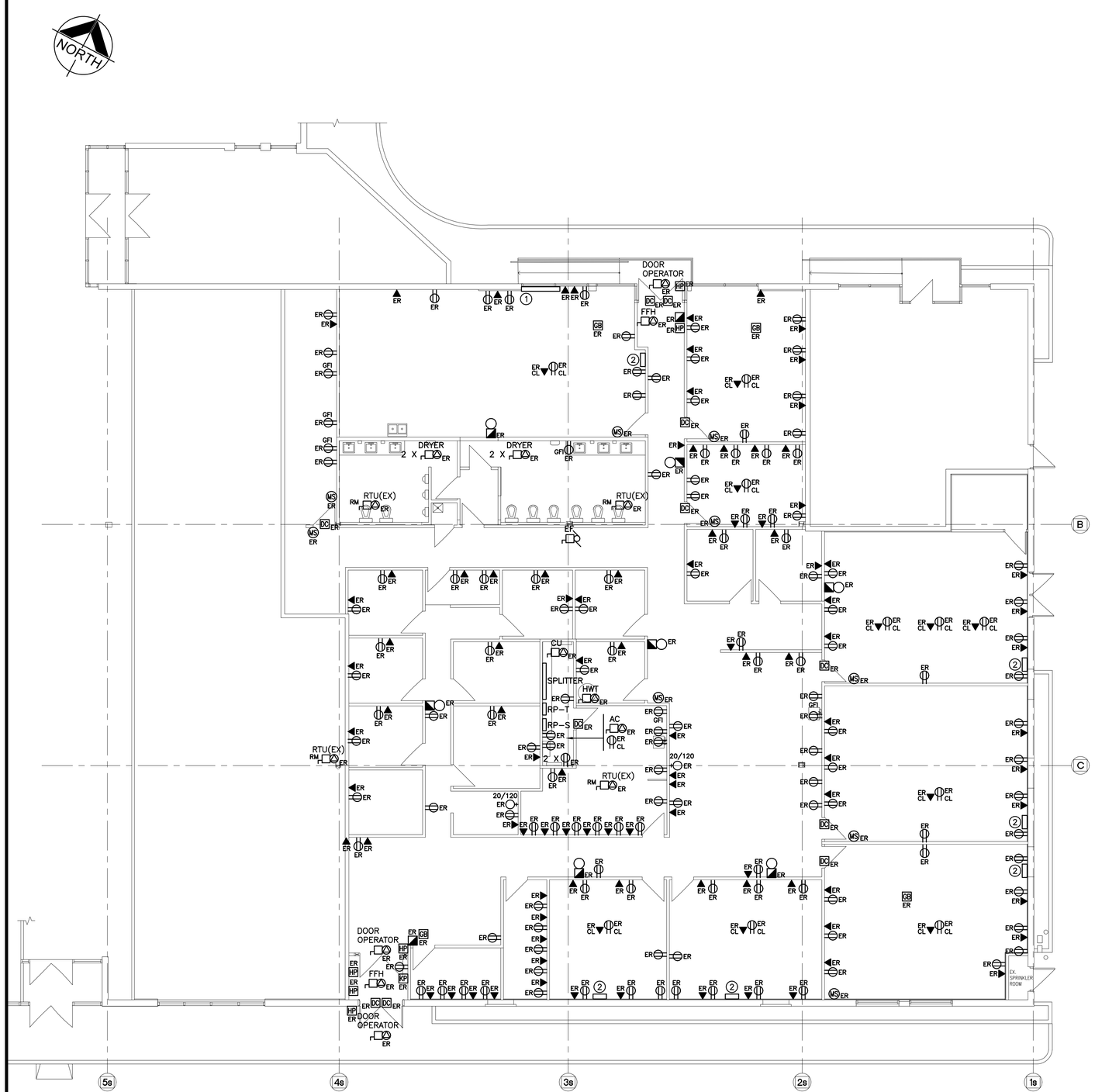


N-1 ALL EXISTING BRANCH WIRING AND RACEWAYS, INCLUDING THOSE COILED IN CEILING SPACE SHALL BE REMOVED BACK TO SOURCE PANEL. REFER TO SPECIFICATIONS FOR ADDITIONAL DEMOLITION REQUIREMENTS. DO NOT REUSE EXISTING WIRING OR CONDUIT SYSTEMS.

N-2 REMOVE ALL ABANDONED ZONE CONDUITS INCLUDING THOSE IN CEILING SPACE. EXISTING ZONE CONDUITS NOT SHOWN ON DRAWING.

N-3 BASE BID PRICE SHALL INCLUDE FOR THE REMOVAL OF TEN (10) ADDITIONAL RECEPTACLES, COMMUNICATIONS ROUGH-INS, ETC. OVER AND ABOVE THOSE SHOWN ON DRAWING NO. E-013. REFER TO SPECIFICATIONS FOR ADDITIONAL REQUIREMENTS.

N-4 CONFIRM DEMOLITION REQUIREMENTS WITH MECHANICAL CONTRACTOR PRIOR TO DISCONNECTING MECHANICAL EQUIPMENT.

N-5 DO NOT REUSE ANY DEVICES, BACKBOXES, CONTROL SYSTEMS, ETC. REMOVED AS PART OF THIS SCOPE OF WORK.

N-6 REWIRE ALL EXISTING TO REMAIN DEVICES AS REQUIRED TO ENSURE CONTINUITY OF SERVICES. EXISTING TO REMAIN DEVICES NOT SHOWN ON DRAWING.

(1) EXISTING SURFACE MOUNTED METAL RACEWAY TO BE REMOVED AS PART OF THIS SCOPE OF WORK

(2) EXISTING WALL MOUNTED EQUIPMENT CABINET TO BE REMOVED AS PART OF THIS SCOPE OF WORK

ALL MEASUREMENTS ARE TO BE VERIFIED BY THE CONTRACTOR ON SITE AND ANY DISCREPANCIES ARE TO BE REPORTED BEFORE PROCEEDING WITH THE WORK. THE REGION OF DURHAM ASSUMES NO RESPONSIBILITY FOR THE ACCURACY OF THE LOCATION OF EXISTING SERVICES AS INDICATED ON THIS DRAWING. DO NOT SCALE DRAWINGS.

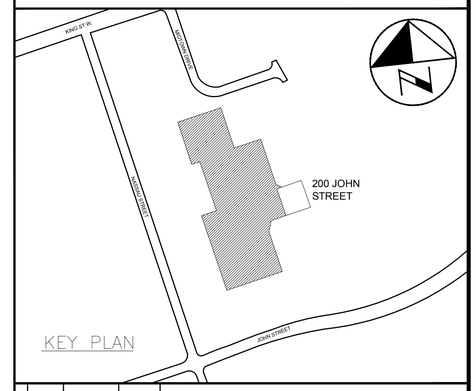


CONSULTANT REVISIONS

| NO. | DATE | NAME | REVISIONS |
|---|---|---|---|
| | | | |

PRIME CONSULTANT

BARRY BRYAN ASSOCIATES
Architects
Engineers
Project Managers
250 Water St.
Suite 201
Whitby, Ontario
L1N 0G5
Tel: (905) 666-5252
Fax: (905) 666-5256
e-mail: bba@bba-arcneng.com

LICENSED PROFESSIONAL ENGINEER H.D. COHEN 90414335 FEB09/2021 PROVINCE OF ONTARIO

SUB-CONSULTANT

HCC ENGINEERING
DESIGN AND TECHNOLOGY SERVICES GROUP
HCC ENGINEERING LIMITED
40 EGLINTON AVENUE EAST, SUITE 600
TORONTO, ONTARIO, M4P 3A2
Tel: (416) 932-2423

LICENSED PROFESSIONAL ENGINEER X. P. CHEN 100219955 FEB09/2021 PROVINCE OF ONTARIO

HCC Project No.: 20104

| | | | |
|---|---|---|---|
| DESIGN BY: PC | | SCALE 1:100 | |
| DRAWN BY: TLR | | DATE: 2020-05-01 | |
| CHECKED BY: PC/HDC | | CONSULTANT PROJECT NO. 20060 | |
| APPROVED BY: HDC | | | |

CONTRACT REVISIONS

| NO. | DATE | NAME | REVISIONS |
|---|---|---|---|
| 3 | FEB09/2021 | HCC | ISSUED FOR PERMIT & TENDER |
| 2 | OCT30/2020 | HCC | ISSUED FOR 90% REVIEW |
| 1 | JUNE 1/20 | HCC | ISSUED FOR REVIEW |

THE REGIONAL MUNICIPALITY OF DURHAM
WORKS DEPARTMENT
DESIGN, CONSTRUCTION & ASSET MANAGEMENT

# RELOCATION OF DENTAL CLINIC TO 200 JOHN ST., OSHAWA

## ELECTRICAL DEMOLITION PLAN

| PROPERTY NO. | FACILITY CODE | FACILITIES PROJECT NO. |
|---|---|---|
| N/A | LEA-O-07 | LEA-O-07-19-01 |
| CONTRACT NO. | DRAWING NO. | SHEET NO. |
| T-1032-2021 | E-013 | 046 |

F:\Projects 2020\20104\E-013D.dwg

REFER TO DETAIL NO. 3 ON DRAWING NO. E-005 FOR FIXTURE SCHEDULE

N-1 LIGHTING AND FIRE ALARM LAYOUT SHOWS EXISTING REFLECTED CEILING PLAN ONLY. REFER TO DRAWING NO. E-011 FOR NEW LAYOUT AND FOR ADDITIONAL DEMOLITION REQUIREMENTS.

N-2 NOT USED.

N-3 BASE BID PRICE SHALL INCLUDE FOR THE REMOVAL OF FIVE (5) ADDITIONAL FIXTURES AND FIRE ALARM DEVICES OVER AND ABOVE THOSE SHOWN ON DRAWING NO. E-014.

N-4 DISPOSE OF ALL FIXTURES REMOVED AS PART OF THIS SCOPE OF WORK. RECYCLE ALL APPLICABLE COMPOUNDS AS DETAILED IN 'GREEN MEASURES' REQUIREMENTS. PROVIDE DOCUMENTATION SUPPORTING RECYCLING MEASURES.

N-5 ALL EXIT SIGNS ARE TYPE 'E2' UNLESS OTHERWISE SPECIFIED.

N-6 DO NOT REUSE EXISTING EXIT SIGN, ETC. DENOTED AS EXISTING TO BE REMOVED AS PART OF THIS SCOPE OF WORK.

N-7 AS PART OF THIS SCOPE OF WORK ELECTRICAL CONTRACTOR MUST PROCURE (ORDER AND PAY FOR) THE SERVICES OF AEVITAS TO DISPOSE OF ALL LAMPS AND BALLASTS REMOVED AS PART OF THIS SCOPE OF WORK IN COMPLIANCE WITH MINISTRY STANDARDS AND ENVIRONMENTALLY SAFE METHODS. ELECTRICAL CONTRACTOR SHALL PROVIDE A SUBMISSION (LETTER) STATING THAT LAMPS AND BALLASTS WERE DISPOSED OF THROUGH ENVIRONMENTALLY SAFE METHODS. THE SUBMISSION BY THE ELECTRICAL CONTRACTOR SHALL INCLUDE THE WAYBILL DETAILING LOCATION OF DISPOSAL AND QUANTITY OF LAMPS AND BALLASTS THAT WERE DISPOSED.

N-8 REWIRE ALL EXISTING TO REMAIN FIXTURES TO ENSURE CONTINUITY OF SERVICES.

N-9 REMOVE LIGHTING CONTACTORS CONTROLLING RESPECTIVE MASTER LIGHT SWITCHES.

ALL MEASUREMENTS ARE TO BE VERIFIED BY THE CONTRACTOR ON SITE AND ANY DISCREPANCIES ARE TO BE REPORTED BEFORE PROCEEDING WITH THE WORK. THE REGION OF DURHAM ASSUMES NO RESPONSIBILITY FOR THE ACCURACY OF THE LOCATION OF EXISTING SERVICES AS INDICATED ON THIS DRAWING. DO NOT SCALE DRAWINGS.

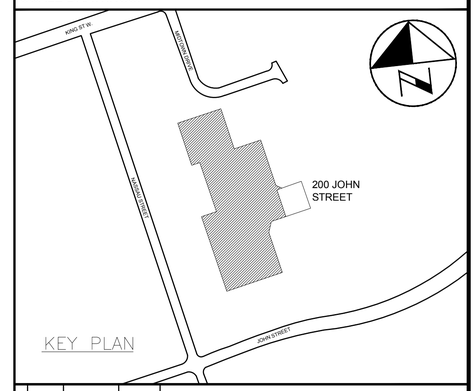


CONSULTANT REVISIONS

| NO. | DATE | NAME | REVISIONS |
|---|---|---|---|
| | | | |
| | | | |
| | | | |
| | | | |
| | | | |
| | | | |
| | | | |
| | | | |

PRIME CONSULTANT

BARRY BRYAN ASSOCIATES
Architects
Engineers
Project Managers
250 Water St.
Suite 201
Whitby, Ontario
L1N 0G5
Tel: (905) 666-5252
Fax: (905) 666-5256
e-mail: bba@bba-arcneng.com

LICENSED PROFESSIONAL ENGINEER
H.D. COHEN
90414335
FEB09/2021
PROVINCE OF ONTARIO

SUB-CONSULTANT

HCC ENGINEERING
DESIGN AND TECHNOLOGY SERVICES GROUP
HCC ENGINEERING LIMITED
40 EGLINTON AVENUE EAST, SUITE 600
TORONTO, ONTARIO, M4P 3A2
Tel: (416) 932-2423

LICENSED PROFESSIONAL ENGINEER
X. P. CHEN
100219955
FEB09/2021
PROVINCE OF ONTARIO

HCC Project No.: 20104

| | |
|---|---|
| DESIGN BY: PC | SCALE 1:100 |
| DRAWN BY: TLR | DATE: 2020-05-01 |
| CHECKED BY: PC/HDC | CONSULTANT PROJECT NO. 20060 |
| APPROVED BY: HDC | |

CONTRACT REVISIONS

| NO. | DATE | NAME | REVISIONS |
|---|---|---|---|
| | | | |
| | | | |
| | | | |
| | | | |
| | | | |
| | | | |
| 3 | FEB09/2021 | HCC | ISSUED FOR PERMIT & TENDER |
| 2 | OCT30/2020 | HCC | ISSUED FOR 90% REVIEW |
| 1 | JUNE 1/20 | HCC | ISSUED FOR REVIEW |

DURHAM REGION

THE REGIONAL MUNICIPALITY OF DURHAM
WORKS DEPARTMENT
DESIGN, CONSTRUCTION & ASSET MANAGEMENT

# RELOCATION OF DENTAL CLINIC TO 200 JOHN ST., OSHAWA

## REFLECTED CEILING DEMOLITION PLAN

| PROPERTY NO. | FACILITY CODE | FACILITIES PROJECT NO. |
|---|---|---|
| N/A | LEA-O-07 | LEA-O-07-19-01 |
| CONTRACT NO. | DRAWING NO. | SHEET NO. |
| T-1032-2021 | E-014 | 047 |

F:\Projects 2020\20104\E-014D.dwg

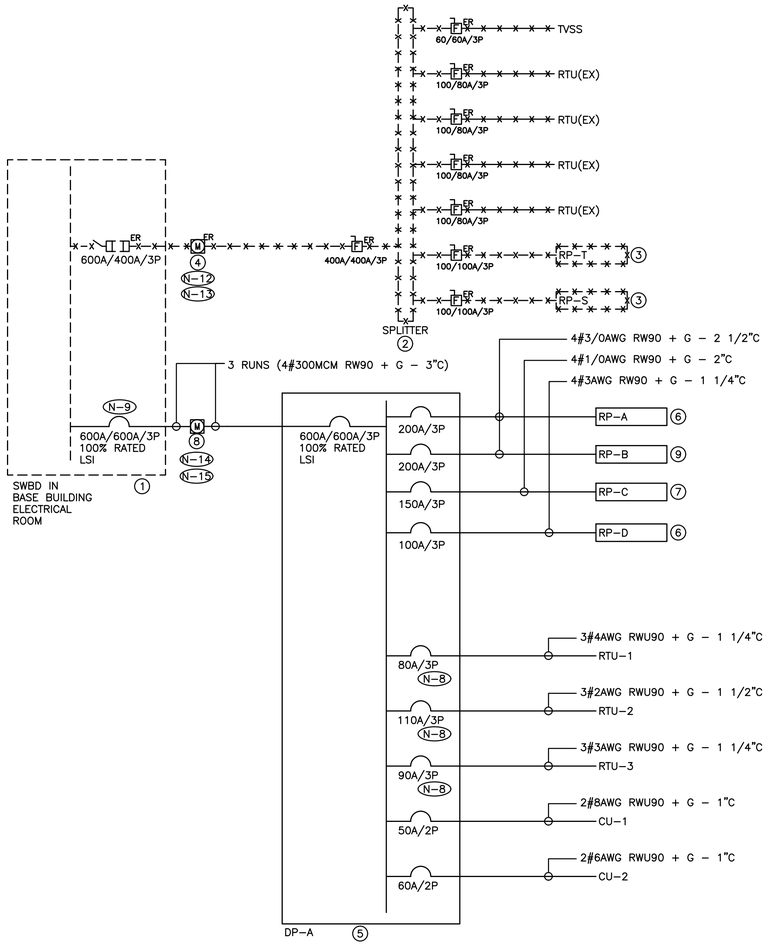


SWITCHBOARD MANUFACTURER HIGH LEVEL SCOPE OF WORK

PROCURE THE SERVICE OF THE SWITCHBOARD MANUFACTURER TO COMPLETE THE FOLLOWING SCOPES OF WORK.

SWITCHBOARD MANUFACTURER TO SUPPLY AND TO PROVIDE ONSITE INSTALLATION OF ONE (1) 600A/3P/100% RATED BREAKER IN EXISTING GE SWITCHGEAR, 120/208V, 1600A, 3P4W.

SCOPE OF WORK:
- ADD LUG PADS TO MAIN THRU BUS FOR CONNECTION CABLES TO THE NEW BREAKER.
- INSTALL NEW BREAKER, 120/208V, 600A, 3P, 100% RATED, 60HZ, 125KA @ 240VAC.
- INSTALL CABLES FEEDING THE NEW BREAKER
- NEW DOOR
- RE-CERTIFY SWITCHGEAR

ELECTRICAL CONTRACTOR TO PREPARE A PRELIMINARY ZERO FEEDER LENGTH COORDINATION STUDY PRIOR TO ORDERING DISTRIBUTION. SUBMIT TO CONSULTANT FOR REVIEW AND APPROVAL.

(N-1) RISER IS DIAGRAMMATIC ONLY. REFER TO FLOOR PLANS FOR DEVICE QUANTITY AND LOCATIONS.

(N-2) PROVIDE FIRE RATED PLYWOOD BACKBOARDS FOR ALL ELECTRICAL DISTRIBUTION EQUIPMENT PROVIDED AS PART OF THIS CONTRACT AND FOR ALL PREPURCHASED/PREQUALIFIED DISTRIBUTION. PAINT BACKBOARDS WITH FIRE RETARDANT PAINT (COLOUR AS DIRECTED ON SITE BY ARCHITECT). FIRE RATED STAMP MUST BE ON ALL PIECES PROVIDED AND MUST BE VISIBLE WHEN INSTALLED. DO NOT PAINT OVER STAMP.

(N-3) PROVIDE DEDICATED CORE DRILLED WALL AND FLOOR PENETRATIONS ON EVERY FLOOR. EXACT LOCATION OF ALL CORE DRILLS TO BE DETERMINED BY X-RAY RESULTS. ALL X-RAYS MUST BE REVIEWED AND APPROVED BY LANDLORD PRIOR TO CORE DRILLING.

(N-4) PROVIDE TEMPORARY POWER AND LIGHTING THROUGHOUT PROJECT TO ACCOMMODATE REQUIREMENTS OF ALL TRADES, INCLUDING ELEVATOR CONTRACTOR. REQUIREMENTS INCLUDE PROVIDING EXTENSION CORDS, EXTENSION LIGHTING AND EQUIPMENT REQUIRED FOR THE WORK OF ALL TRADES. PROVIDE TEMPORARY GENERATOR AND CABLES AS REQUIRED WHEN UTILITY SERVICE IS NOT AVAILABLE. ALL COSTS RELATED TO THIS WORK SHALL BE INCLUDED IN THE BASE BID PRICE.

(N-5) ROUTE ALL CONDUIT SYSTEMS AROUND DUCT WORK, FIRE SUPPRESSION PIPING, ETC AS REQUIRED TO ACCOMMODATE INSTALLATION. REFER TO MECHANICAL DRAWINGS FOR ADDITIONAL DETAILS.

(N-6) ALL INDOOR DISTRIBUTION (INCLUDING TRANSFORMERS) PROVIDED AS PART OF THIS SCOPE OF WORK MUST BE NEMA 2 ENCLOSURE. PROVIDE ALL FITTINGS, ACCESSORIES, ETC REQUIRED FOR A COMPLETE INSTALLATION, SUITABLE FOR RESPECTIVE ENVIRONMENTS. PROVIDE COMPRESSION FITTINGS FOR SERVICES ENTERING DISTRIBUTION.

(N-7) PROVIDE REQUIRED PENETRATIONS THROUGH ROOF AND BUILDING ENVELOP. COORDINATE WORK AND WEATHERPROOF SEALING REQUIREMENTS WITH LANDLORD.

(N-8) CONFIRM BREAKER/FUSE AND RECEPTACLE/DISCONNECT REQUIREMENTS PRIOR TO INSTALLATION.

(N-9) AS PART OF THIS SCOPE OF WORK PROCURE THE SERVICES OF THE SWITCHBOARD MANUFACTURER TO SUPPLY AND INSTALL BREAKER INDICATED. REFER TO SWITCHBOARD MANUFACTURER HIGH LEVEL SCOPE OF WORK ON THIS DRAWING FOR ADDITIONAL REQUIREMENTS.

(N-10) NOT USED.

(N-11) ALL BREAKERS REQUIRED TO COMPLETE ALL SCOPES OF WORK TO BE NEW. DO NOT REUSE EXISTING BREAKERS.

(N-12) ELECTRICAL CONTRACTOR SHALL REMOVE EXISTING METER (INCLUDING PT'S AND CT'S) AND PACKAGE FOR PICK UP BY LOCAL UTILITY. COORDINATE AND PAY FOR ALL LOCAL UTILITY COSTS TO PICK UP METER.

(N-13) AS PART OF THIS SCOPE OF WORK ELECTRICAL CONTRACTOR SHALL COORDINATE AND PAY FOR THE SERVICES OF THE LOCAL UTILITY TO PROVIDE ACCESS TO THE EXISTING METER CABINET AS REQUIRED TO FACILITATE ALL SCOPES OF WORK PROVIDED AS PART OF THIS SCOPE OF WORK.

(N-14) PROVIDE UTILITY APPROVED METER SOCKET AS PART OF THIS SCOPE OF WORK.

(N-15) PROVIDE NEW UTILITY METER. AS PART OF THIS SCOPE OF WORK ELECTRICAL CONTRACTOR SHALL INCLUDE FOR ALL UTILITY COSTS AND CONNECTION CHARGES FOR ALL NEW SERVICES.

(1) EXISTING SWITCHBOARD - 120/208V/3PH/4W/1600A BUS/GE SWITCHGEAR/65KA RMS

(2) EXISTING SPLITTER - 120/208V/3PH/4W/400A

(3) EXISTING RECEPTACLE PANEL - 120/208V/3PH/4W/225A MAINS/42CCT/CUTLER-HAMMER PRL1A

(4) EXISTING METER CABINET C/W METER BASE AND METER TO BE REMOVED AS PART OF THIS SCOPE OF WORK

(5) DISTRIBUTION PANEL - 120/208V/3PH/4W/600A MCB/SQ D I LINE HCP/42"W X 9.5"D X 86"H C/W HINGED DOOR/COPPER BUS/38KA RMS

(6) RECEPTACLE PANEL - 120/208V/3PH/4W/225A MAINS/COPPER BUS/84CCT 20"W/SQ D NQ/38KA RMS

(7) RECEPTACLE PANEL - 120/208V/3PH/4W/150A MCB/COPPER BUS/84CCT 20"W/SQ D NQ/18KA RMS/RECESSED TRIM FACTORY PAINTED CUSTOM COLOUR (MATCH TO PAINT CHIP TO BE PROVIDED BY INTERIOR DESIGNER DURING CONSTRUCTION)

(8) 4' X 4' X 1' OSHAWA PUC NETWORKS APPROVED METER CABINET C/W BACK PLATE AND VIEWING WINDOW (CONFIRM SIZE WITH UTILITY PRIOR TO ORDERING)

(9) RECEPTACLE PANEL - 120/208V/3PH/4W/200A MCB/COPPER BUS/84CCT 20"W/SQ D NQ/18KA RMS/RECESSED TRIM FACTORY PAINTED CUSTOM COLOUR (MATCH TO PAINT CHIP TO BE PROVIDED BY INTERIOR DESIGNER DURING CONSTRUCTION)

——————— DENOTES NEW PROVIDED BY ELECTRICAL CONTRACTOR

- - - - - - - - DENOTES EXISTING TO REMAIN

-x-x-x-x-x-x- DENOTES EXISTING TO BE REMOVED BY ELECTRICAL CONTRACTOR

ALL MEASUREMENTS ARE TO BE VERIFIED BY THE CONTRACTOR ON SITE AND ANY DISCREPANCIES ARE TO BE REPORTED BEFORE PROCEEDING WITH THE WORK. THE REGION OF DURHAM ASSUMES NO RESPONSIBILITY FOR THE ACCURACY OF THE LOCATION OF EXISTING SERVICES AS INDICATED ON THIS DRAWING. DO NOT SCALE DRAWINGS.

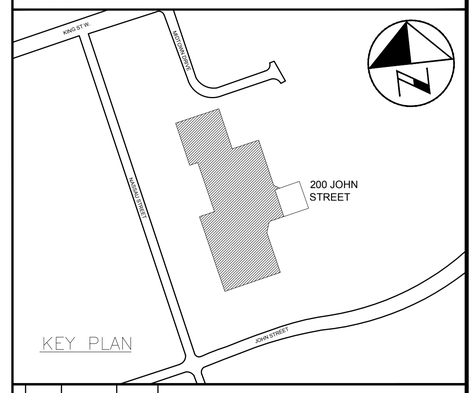


CONSULTANT REVISIONS

| NO. | DATE | NAME | REVISIONS |
|---|---|---|---|
| | | | |
| | | | |
| | | | |
| | | | |
| | | | |
| | | | |
| | | | |
| | | | |

PRIME CONSULTANT

BARRY BRYAN ASSOCIATES
Architects
Engineers
Project Managers
250 Water St.
Suite 201
Whitby, Ontario
L1N 0G5
Tel: (905) 666-5252
Fax: (905) 666-5256
e-mail: bba@bba-arcneng.com

LICENSED PROFESSIONAL ENGINEER
H.D. COHEN
90414335
FEB09/2021
PROVINCE OF ONTARIO

SUB-CONSULTANT

HCC ENGINEERING
DESIGN AND TECHNOLOGY SERVICES GROUP
HCC ENGINEERING LIMITED
40 EGLINTON AVENUE EAST, SUITE 600
TORONTO, ONTARIO, M4P 3A2
Tel: (416) 932-2423

LICENSED PROFESSIONAL ENGINEER
X. P. CHEN
100219955
FEB09/2021
PROVINCE OF ONTARIO

HCC Project No.: 20104

| | | | |
|---|---|---|---|
| DESIGN BY: PC | | SCALE: N.T.S. | |
| DRAWN BY: TLR | | DATE: 2020-05-01 | |
| CHECKED BY: PC/HDC | | CONSULTANT PROJECT NO.: 20060 | |
| APPROVED BY: HDC | | | |

CONTRACT REVISIONS

| NO. | DATE | NAME | REVISIONS |
|---|---|---|---|
| | | | |
| | | | |
| | | | |
| | | | |
| | | | |
| 3 | FEB09/2021 | HCC | ISSUED FOR PERMIT & TENDER |
| 2 | OCT30/2020 | HCC | ISSUED FOR 90% REVIEW |
| 1 | JUNE 1/20 | HCC | ISSUED FOR 60% REVIEW |

DURHAM REGION

THE REGIONAL MUNICIPALITY OF DURHAM
WORKS DEPARTMENT
DESIGN, CONSTRUCTION & ASSET MANAGEMENT

# RELOCATION OF DENTAL CLINIC TO 200 JOHN ST., OSHAWA

## ELECTRICAL SINGLE LINE DIAGRAM

| PROPERTY NO. | FACILITY CODE | FACILITIES PROJECT NO. |
|---|---|---|
| N/A | LEA-O-07 | LEA-O-07-19-01 |
| CONTRACT NO. | DRAWING NO. | SHEET NO. |
| T-1032-2021 | E-015 | 048 |

F:\Projects 2020\20104\E-015G.dwg

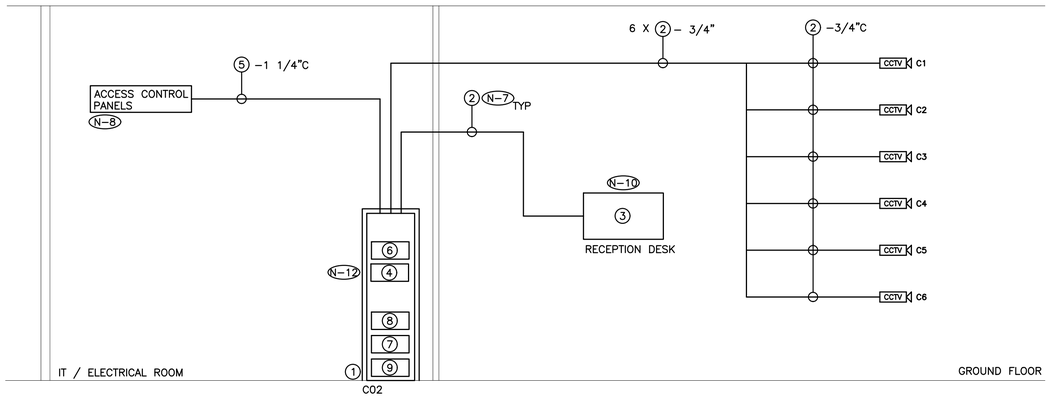


(1) EQUIPMENT CABINET PROVIDED BY COMMUNICATIONS CONTRACTOR.

(2) PLENUM RATED 4 PAIR CATEGORY 6 UTP DATA CABLE PROVIDED BY COMMUNICATIONS CONTRACTOR. RED IN COLOUR.

(3) CCTV SYSTEM CLIENT (NETWORK VIDEO MANAGEMENT) WORKSTATION C/W SENSTAR THIN CLIENT 10D PROVIDED AS PART OF THIS SCOPE OF WORK. REFER TO SPECIFICATIONS FOR ADDITIONAL REQUIREMENTS.

(4) CCTV SYSTEM NETWORK STORAGE SERVERS PROVIDED AS PART OF THIS SCOPE OF WORK – VIVOTEK NVR ND9322P–V2 C/W DIGITAL WATCHDOG SPECTRUM VIDEO MANAGEMENT SYSTEM.

(5) MULTICONDUCTOR CABLE PER MANUFACTURER'S RECOMMENDATIONS.

(6) 1RMU 24 PORT POE ACTIVE SWITCH – VIVOTEK AW–GEV–264A–370.

(7) 2RMU 1500VA UPS – XTREME POWER P80 1500VA C/W NETWORK MANAGEMENT PROTOCOL (SNMP) NOTIFICATION CARD.

(8) RACK MOUNTED CONSOLE KVM SWITCH PROVIDED AS PART OF THIS SCOPE OF WORK.

(9) 2RMU UPS BATTERY – XTREME POWER P90–BP48

| CCTV CAMERA | MAKE/MODEL NUMBER |
|---|---|
| C1 | VIVOTEK FD9167–HT |
| C2 | VIVOTEK FD9167–HT |
| C3 | VIVOTEK CC8370–HV |
| C4 | VIVOTEK FD9167–HT |
| C5 | VIVOTEK CC8370–HV |
| C6 | VIVOTEK FD9167–HT |

———————— DENOTES NEW PROVIDED BY ELECTRICAL CONTRACTOR

– – – – – – – – – DENOTES EXISTING TO REMAIN

–x–x–x–x–x–x– DENOTES EXISTING TO BE REMOVED BY ELECTRICAL CONTRACTOR

(N–1) RISER IS DIAGRAMMATIC ONLY. PROVIDE QUANTITY OF HARDWARE, MODULES, ACCESSORIES, DEVICES, SOFTWARE, LICENSES, TESTING, PROGRAMMING, COMMISSIONING, ETC., TO ENSURE A FULLY OPERATIONAL CCTV SYSTEM.

(N–2) PROVIDE QUANTITY OF HARDWARE, CAMERAS, SERVERS AND POWER SUPPLIES REQUIRED FOR A FULLY OPERATIONAL CCTV SYSTEM. REFER TO FLOOR PLANS FOR ADDITIONAL REQUIREMENTS. NOTE NETWORK SWITCH PROVIDED BY OWNER.

(N–3) COORDINATE INSTALLATION AND MOUNTING REQUIREMENTS OF CCTV EQUIPMENT PROVIDED AS PART OF THIS SCOPE OF WORK WITH SECURITY VENDOR PRIOR TO COMMENCING WORK.

(N–4) AS PART OF THIS SCOPE OF WORK CONFIGURE ALL CAMERAS PROVIDED AS PART OF THIS SCOPE OF WORK WITH FOLLOWING SETTINGS:

FRAME RATE: 10 IMAGE/S
DUTY CYCLE: 100% (INTERIOR)

(N–5) AS PART OF THIS SCOPE OF WORK, INCLUDE ALL SYSTEM SET UP, PROGRAMMING, LICENSES, LICENSES REQUIRED FOR EACH CAMERA, COMMISSIONING, ETC TO ENSURE A FULLY OPERATIONAL MONITORING SYSTEM. PROVIDE TRAINING FOR ALL FACILITIES STAFF POST COMMISSIONING.

(N–6) AS PART OF THIS SCOPE OF WORK AND PRIOR TO CONSTRUCTION, ELECTRICAL CONTRACTOR SHALL CONFIRM CAMERA INSTALLATION LOCATIONS AND REQUIREMENTS ON SITE WITH CCTV MANUFACTURER, ARCHITECT AND CLIENT PRIOR TO SUBMITTING SHOP DRAWINGS. MOUNTING STYLE AND FIELD OF VIEW FOR ALL CAMERAS SHALL BE CONFIRMED BY BOTH MANUFACTURER AND CLIENT PRIOR TO INSTALLATION.

(N–7) PROVIDE DEDICATED FLOOR AND WALL PENETRATIONS. EXACT LOCATION OF ALL CORE DRILLS TO BE DETERMINED BY X–RAY RESULTS. X–RAYS MUST BE REVIEWED AND APPROVED BY LANDLORD AND STRUCTURAL ENGINEER PRIOR TO CORE DRILLING.

(N–8) AS PART OF THIS SCOPE OF WORK PROVIDE AN INTERFACE BETWEEN CARD ACCESS CONTROL SYSTEM PROVIDED AS PART OF THIS SCOPE OF WORK AND CCTV SYSTEM PROVIDED AS PART OF THIS SCOPE OF WORK SUCH THAT THE CCTV SYSTEM IS INTERFACED WITH THE CARD ACCESS CONTROL SYSTEM PROVIDED AS PART OF THIS SCOPE OF WORK. PROVIDE ALL CARD ACCESS CONTROL SYSTEM AND CCTV SYSTEM LICENSES AND PROGRAMMING. PROVIDE ALL REQUIRED CCTV SYSTEM COMPONENTS, ACCESSORIES, WIRING, OUTPUT CONTACTS, INPUT CONTACTS, ETC. FOR A FULLY OPERATIONAL SYSTEM.

(N–9) ALL FIELD DEVICE WIRING TO BE PULLED AS HOMERUNS TO RESPECTIVE RACK MOUNTED PATCH PANELS PROVIDED BY COMMUNICATIONS CONTRACTOR.

(N–10) AS PART OF THIS SCOPE OF WORK FOR EACH AND EVERY CLIENT WORKSTATION PROVIDE ONE (1) 24" COLOUR LED MONITOR, KEYBOARD, MOUSE AND CCTV SYSTEM MONITORING PROGRAM AND SOFTWARE LICENSE. HARDWARE AND SOFTWARE PROVIDED AS PART OF THIS SCOPE OF WORK SHALL BE INTEGRATED INTO CCTV SYSTEM VIDEO CONSOLE DISPLAY STATION. CCTV SYSTEM VIDEO CONSOLE DISPLAY STATION PROVIDED AS PART OF THIS SCOPE OF WORK.

(N–11) AS PART OF THIS SCOPE OF WORK INCLUDE FOR TWO (2) THREE (3) HOUR MEETING SESSIONS WITH CLIENT AND ARCHITECT TO REVIEW CCTV SYSTEM VIEWING DISPLAY ARRANGEMENT REQUIREMENTS PRIOR TO CONSTRUCTION. AS PART OF THIS SCOPE OF WORK ALLOW FOR AN ADDITIONAL TWO (2) TWO (2) HOUR PROGRAMMING SESSIONS TO FINE TUNE CCTV SYSTEM VIEWING DISPLAY ARRANGEMENTS TO CLIENT'S SATISFACTION OVER AND ABOVE THE TIME REQUIRED TO PROGRAM AND SET UP THE CCTV SYSTEM PROVIDED AS PART OF THIS SCOPE OF WORK.

(N–12) AS PART OF THIS SCOPE OF WORK PROVIDE QUANTITY OF SERVER STORAGE HARD DRIVES SIZED TO ALLOW FOR AT LEAST THIRTY (30) DAYS RECORDING TIME FOR ALL CAMERAS PROVIDED AS PART OF THIS SCOPE OF WORK. STORAGE SPACE MUST ALSO BE SIZED TO INCLUDE/ACCOMMODATE THREE (3) ADDITIONAL FUTURE CAMERAS BASED ON 2 MEGAPIXEL RESOLUTION AND FRAME RATE AND DUTY CYCLE SPECIFIED FOR INTERIOR APPLICATION. REFER TO NOTE N–4 IN THIS DETAIL FOR ADDITIONAL REQUIREMENTS.

(N–13) REFER TO REGIONAL MUNICIPALITY OF DURHAM CORPORATE POLICY AND PROCEDURES MANUAL – SECURITY SERVICES INSTALLATION AND SECURITY SYSTEM STANDARDS, GUIDELINE FOR ADDITIONAL REQUIREMENTS INCLUDING BUT NOT LIMITED TO APPROVED EQUIPMENT SELECTIONS, LABELING REQUIREMENTS, ETC OVER AND ABOVE THOSE DETAILED IN THIS DRAWING PACKAGE AND IN THE ELECTRICAL SPECIFICATIONS BOOK. CONTRACTOR SHALL BE RESPONSIBLE FOR AND MUST INCLUDE IN BASE BID PRICE FOR ALL SCOPES OF WORK DETAILED IN THE REGIONAL MUNICIPALITY OF DURHAM CORPORATE POLICY AND PROCEDURES MANUAL – SECURITY SERVICES INSTALLATION AND SECURITY SYSTEM STANDARDS, ELECTRICAL DRAWINGS AND ELECTRICAL SPECIFICATIONS BOOK. CONTACT REGIONAL MUNICIPALITY OF DURHAM PROJECT MANAGER FOR QUESTIONS REGARDING REGIONAL MUNICIPALITY OF DURHAM CORPORATE POLICY AND PROCEDURES MANUAL – SECURITY SERVICES INSTALLATION AND SECURITY SYSTEM STANDARDS DOCUMENT.

ALL MEASUREMENTS ARE TO BE VERIFIED BY THE CONTRACTOR ON SITE AND ANY DISCREPANCIES ARE TO BE REPORTED BEFORE PROCEEDING WITH THE WORK. THE REGION OF DURHAM ASSUMES NO RESPONSIBILITY FOR THE ACCURACY OF THE LOCATION OF EXISTING SERVICES AS INDICATED ON THIS DRAWING. DO NOT SCALE DRAWINGS.

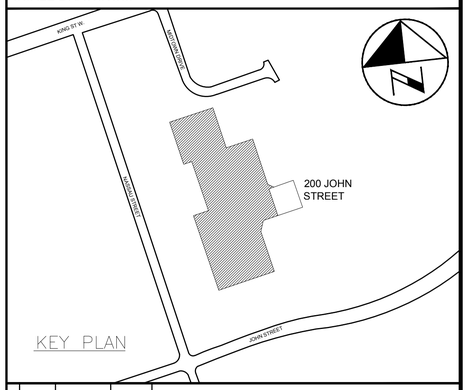


CONSULTANT REVISIONS

| NO. | DATE | NAME | REVISIONS |
|---|---|---|---|
| | | | |

PRIME CONSULTANT

BARRY BRYAN ASSOCIATES
Architects
Engineers
Project Managers
250 Water St.
Suite 201
Whitby, Ontario
L1N 0G5
Tel: (905) 666-5252
Fax: (905) 666-5256
e-mail: bba@bba-arcneng.com

LICENSED PROFESSIONAL ENGINEER
H.D. COHEN
90414335
FEB09/2021
PROVINCE OF ONTARIO

SUB–CONSULTANT

HCC ENGINEERING
DESIGN AND TECHNOLOGY SERVICES GROUP
HCC ENGINEERING LIMITED
40 EGLINTON AVENUE EAST, SUITE 600
TORONTO, ONTARIO, M4P 3A2
Tel: (416) 932-2423

LICENSED PROFESSIONAL ENGINEER
X. P. CHEN
100219955
FEB09/2021
PROVINCE OF ONTARIO

HCC Project No.: 20104

| | |
|---|---|
| DESIGN BY: PC | SCALE N.T.S. |
| DRAWN BY: TLR | DATE: 2020–05–01 |
| CHECKED BY: PC/HDC | CONSULTANT PROJECT NO. 20060 |
| APPROVED BY: HDC | |

CONTRACT REVISIONS

| NO. | DATE | NAME | REVISIONS |
|---|---|---|---|
| 3 | FEB09/2021 | HCC | ISSUED FOR PERMIT & TENDER |
| 2 | OCT30/2020 | HCC | ISSUED FOR 90% REVIEW |
| 1 | JUNE 1/20 | HCC | ISSUED FOR 60% REVIEW |

DURHAM REGION

THE REGIONAL MUNICIPALITY OF DURHAM
WORKS DEPARTMENT
DESIGN, CONSTRUCTION & ASSET MANAGEMENT

# RELOCATION OF DENTAL CLINIC TO 200 JOHN ST., OSHAWA

## CCTV SYSTEM RISER DIAGRAM

| PROPERTY NO. | FACILITY CODE | FACILITIES PROJECT NO. |
|---|---|---|
| N/A | LEA–O–07 | LEA–O–07–19–01 |
| CONTRACT NO. | DRAWING NO. | SHEET NO. |
| T–1032–2021 | E–016 | 049 |

F:\Projects 2020\20104\E-016D.dwg

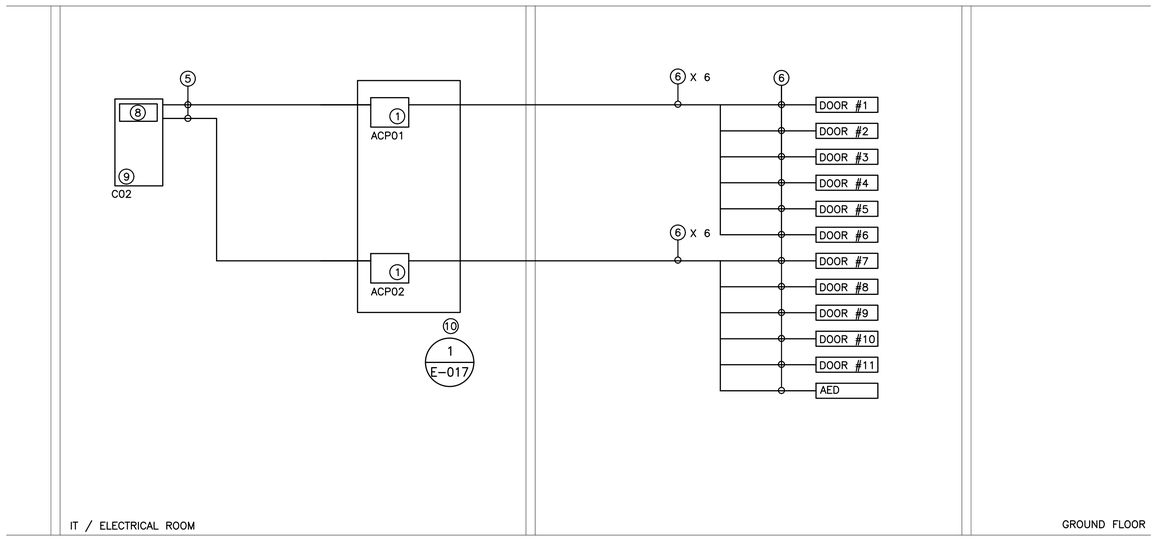


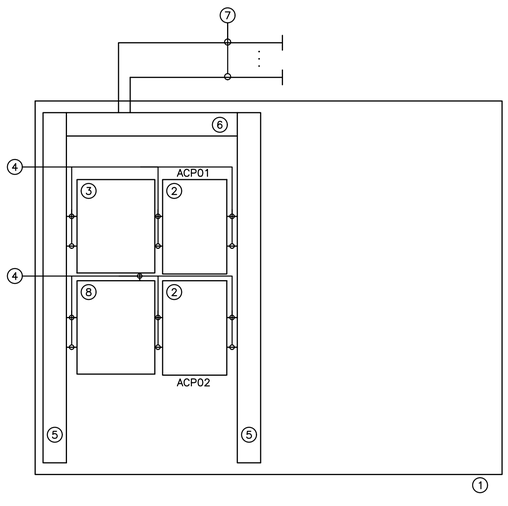


(N-1) RISER IS DIAGRAMMATIC ONLY. REFER TO FLOOR PLANS FOR DEVICE QUANTITY AND LOCATIONS.

(N-2) ALL CONDUITS SHALL BE C/W BUSHINGS AND RUBBERIZED GROMMETS.

(N-3) ALL CONDUITS TO BE EMT. EMT COUPLING AND CONNECTORS SHALL BE T&B STEEL, SET SCREW TYPE. PROVIDE SPARE PULLSTRING IN ALL CONDUITS FOR FUTURE USE.

(N-4) PROVIDE DEDICATED FLOOR AND WALL PENETRATIONS. EXACT LOCATION OF ALL CORE DRILLS TO BE DETERMINED BY X-RAY RESULTS. X-RAYS MUST BE REVIEWED AND APPROVED BY LANDLORD PRIOR TO CORE DRILLING.

1. VOICE MDF / SECURITY BACKBOARD PROVIDED AS PART OF THIS SCOPE OF WORK
2. ACCESS CONTROL PANELS SUPPLIED BY CLIENT AND INSTALLED AS PART OF THIS SCOPE OF WORK
3. ACCESS CONTROL SYSTEM AND ELECTRIC STRIKE POWER SUPPLY SUPPLIED BY CLIENT AND INSTALLED BY ELECTRICAL CONTRACTOR AS PART OF THIS SCOPE OF WORK
4. 2" CONDUIT NIPPLE C/W BUSHINGS AND RUBBERIZED GROMMETS.
5. 7'-6" LENGTH OF 6" X 6" WIREWAY, MOUNTED VERTICALLY PROVIDED AS PART OF THIS SCOPE OF WORK FOR SECURITY CONTRACTOR'S USE. COORDINATE EXACT REQUIREMENTS ON SITE WITH SECURITY CONTRACTOR.
6. 4' LENGTH OF 6" X 6" WIREWAY, MOUNTED HORIZONTALLY PROVIDED AS PART OF THIS SCOPE OF WORK FOR SECURITY CONTRACTOR'S USE. COORDINATE EXACT REQUIREMENTS ON SITE WITH SECURITY CONTRACTOR.
7. ZONE CONDUITS C/W WIRING. REFER TO DETAIL NO. 1 ON DRAWING NO. E-004 AND E-017 FOR ADDITIONAL REQUIREMENTS.
8. BATTERY CABINET C/W 12V BATTERY PACKS SUPPLIED BY CLIENT AND INSTALLED BY ELECTRICAL CONTRACTOR AS PART OF THIS SCOPE OF WORK

1 / E-017 VOICE MDF/SECURITY BACKBOARD BUILD OUT DETAIL
SCALE: NTS

(N-1) RISER IS DIAGRAMMATIC ONLY. PROVIDE QUANTITY OF POWER CIRCUITS, CONTROL PANELS, MODULES, FIELD DEVICES, ACCESSORIES, WIRE, SECURITY CABLES, SOFTWARE, TESTING, LICENSES, PROGRAMMING, COMMISSIONING, ETC, TO ENSURE A FULLY OPERATIONAL ACCESS CONTROL SYSTEM. REFER TO DRAWING NO. E-017 AND TO FLOOR PLANS FOR ADDITIONAL REQUIREMENTS.

(N-2) REFER TO FLOOR PLAN DRAWINGS FOR DEVICE QUANTITY AND LOCATIONS.

(N-3) PROVIDE CONDUITS AND WIRES IN ACCORDANCE WITH THE MANUFACTURER'S RECOMMENDATIONS. MINIMUM CONDUIT SIZE AS DETAILED ON RISER.

(N-4) ALL CONDUITS SHALL BE C/W BUSHINGS AND RUBBERIZED GROMMETS.

(N-5) ALL CONDUITS TO BE EMT. EMT COUPLING AND CONNECTORS SHALL BE T&B STEEL, SET SCREW TYPE. PROVIDE SPARE PULLSTRING IN ALL CONDUITS FOR FUTURE USE.

(N-6) ELECTRICAL CONTRACTOR SHALL NOT USE PULLBOXES AS SUBSTITUTES FOR 90° BENDS. 12" X 12" X 6" PULLBOXES C/W TYPE SNAKE EYE SECURITY SCREWS SHALL BE PROVIDED ON THE BASIS OF NOT MORE THAN TWO (2) RIGHT ANGLE BENDS OR NOT MORE THAN 100' IN STRAIGHT RUNS BETWEEN BOXES.

(N-7) CONTACT SECURITY MANUFACTURER FOR ADDITIONAL WIRE, CONDUIT, PULLBOX AND POWER REQUIREMENTS OVER AND ABOVE THOSE SHOWN ON DRAWING.

(N-8) PROVIDE DEDICATED FLOOR AND WALL PENETRATIONS. EXACT LOCATION OF ALL CORE DRILLS TO BE DETERMINED BY X-RAY RESULTS. X-RAYS MUST BE REVIEWED AND APPROVED BY LANDLORD PRIOR TO CORE DRILLING.

(N-9) PROVIDE FIRE RATED PLYWOOD BACKBOARDS FOR ALL CABINETS, ACCESS CONTROL PANELS, POWER SUPPLIES, ETC PROVIDED AS PART OF THIS CONTRACT. PAINT BACKBOARDS WITH WHITE FIRE RETARDANT PAINT. FIRE RATED STAMP MUST BE ON ALL PIECES PROVIDED AND MUST BE VISIBLE WHEN INSTALLED. DO NOT PAINT OVER STAMP.

(N-10) NOT USED.

(N-11) ALL CONDUITS PROVIDED BY THE ELECTRICAL CONTRACTOR ARE TO BE ROUTED IN THE CEILING SPACE.

(N-12) AS PART OF THIS SCOPE OF WORK, COORDINATE TERMINATION OF SECURITY CABLES PROVIDED AS PART OF THIS SCOPE OF WORK ON SITE WITH SECURITY CONTRATOR PRIOR TO COMMENCING WORK.

1. SECURITY SYSTEM ACCESS CONTROL PANEL SUPPLIED BY CLIENT AND INSTALLED AS PART OF THIS SCOPE OF WORK
2. NOT USED.
3. NOT USED.
4. NOT USED.
5. 3/4" ZONE CONDUIT C/W BUSHINGS AND RUBBERIZED GROMMETS
6. 1 1/4" ZONE CONDUIT C/W BUSHINGS AND RUBBERIZED GROMMETS
7. NOT USED.
8. ACCESS CONTROL SYSTEM SERVER SUPPLIED BY CLIENT AND INSTALLED AS PART OF THIS SCOPE OF WORK
9. EQUIPMENT CABINET PROVIDED BY COMMUNICATIONS CONTRACTOR
10. VOICE MDF / SECURITY BACKBOARD PROVIDED AS PART OF THIS SCOPE OF WORK

——————— DENOTES NEW PROVIDED BY ELECTRICAL CONTRACTOR
– – – – – – – – – DENOTES EXISTING TO REMAIN
-x-x-x-x-x-x-x- DENOTES EXISTING TO BE REMOVED BY ELECTRICAL CONTRACTOR

ALL MEASUREMENTS ARE TO BE VERIFIED BY THE CONTRACTOR ON SITE AND ANY DISCREPANCIES ARE TO BE REPORTED BEFORE PROCEEDING WITH THE WORK. THE REGION OF DURHAM ASSUMES NO RESPONSIBILITY FOR THE ACCURACY OF THE LOCATION OF EXISTING SERVICES AS INDICATED ON THIS DRAWING. DO NOT SCALE DRAWINGS.

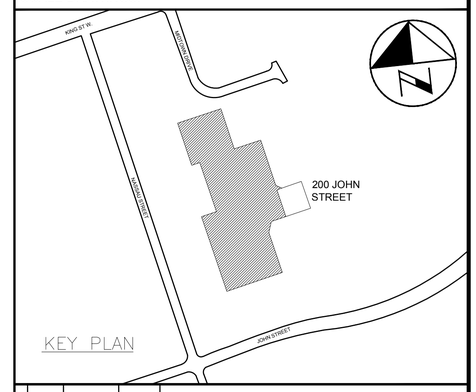


CONSULTANT REVISIONS

| NO. | DATE | NAME | REVISIONS |
|---|---|---|---|
| | | | |
| | | | |
| | | | |
| | | | |
| | | | |
| | | | |
| | | | |
| | | | |
| | | | |

PRIME CONSULTANT

BARRY BRYAN ASSOCIATES
Architects
Engineers
Project Managers
250 Water St.
Suite 201
Whitby, Ontario
L1N 0G5
Tel: (905) 666-5252
Fax: (905) 666-5256
e-mail: bba@bba-archeng.com

LICENSED PROFESSIONAL ENGINEER
H.D. COHEN
90414335
FEB09/2021
PROVINCE OF ONTARIO

SUB-CONSULTANT

HCC ENGINEERING
DESIGN AND TECHNOLOGY SERVICES GROUP
HCC ENGINEERING LIMITED
40 EGLINTON AVENUE EAST, SUITE 600
TORONTO, ONTARIO, M4P 3A2
Tel: (416) 932-2423

LICENSED PROFESSIONAL ENGINEER
X.P. CHEN
100219955
FEB09/2021
PROVINCE OF ONTARIO

HCC Project No.: 20104

| | | | |
|---|---|---|---|
| DESIGN BY: PC | | SCALE N.T.S. | |
| DRAWN BY: TLR | | DATE: 2020-05-01 | |
| CHECKED BY: PC/HDC | | CONSULTANT PROJECT NO. 20060 | |
| APPROVED BY: HDC | | | |

CONTRACT REVISIONS

| NO. | DATE | NAME | REVISIONS |
|---|---|---|---|
| | | | |
| | | | |
| | | | |
| | | | |
| | | | |
| 3 | FEB09/2021 | HCC | ISSUED FOR PERMIT & TENDER |
| 2 | OCT30/2020 | HCC | ISSUED FOR 90% REVIEW |
| 1 | JUNE 1/20 | HCC | ISSUED FOR 60% REVIEW |

THE REGIONAL MUNICIPALITY OF DURHAM
WORKS DEPARTMENT
DESIGN, CONSTRUCTION & ASSET MANAGEMENT

# RELOCATION OF DENTAL CLINIC TO 200 JOHN ST., OSHAWA

## ACCESS CONTROL SYSTEM CONDUIT RISER DIAGRAM

| PROPERTY NO. | FACILITY CODE | FACILITIES PROJECT NO. |
|---|---|---|
| N/A | LEA-0-07 | LEA-0-07-19-01 |
| CONTRACT NO. | DRAWING NO. | SHEET NO. |
| T-1032-2021 | E-017 | 050 |

F:\Projects 2020\20104\E-017D.dwg

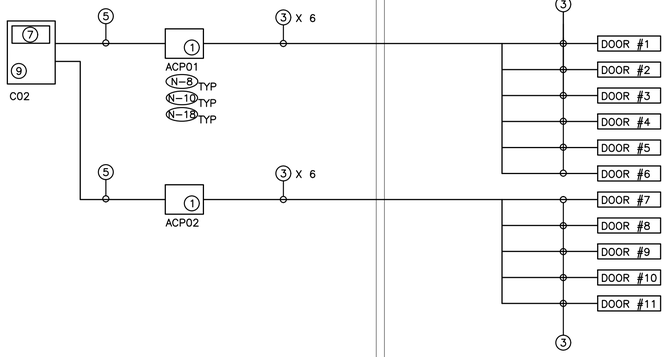


IT / ELECTRICAL ROOM

(1) SECURITY SYSTEM ACCESS CONTROL PANEL C/W 8 READER ACCESS CONTROL MODULES SUPPLIED BY CLIENT AND INSTALLED AS PART OF THIS SCOPE OF WORK

(2) NOT USED.

(3) ACCESS CONTROL SYSTEM WIRING PROVIDED AS PART OF THIS SCOPE OF WORK. REFER TO FLOOR PLANS FOR QUANTITY AND LOCATION OF ACCESS CONTROL DEVICES.

BELDEN 658GFS BANANA PEEL NO OVERALL JACKET
COMPOSITE – LOCK POWER, CARD READER, DOOR CONTACT, REX APPLICATIONS

TYPICAL ACCESS CONTROL SYSTEM DEVICE WIRING
DOOR CONTACT – 2 PAIR #22AWG
MOTION DETECTOR – 1 X 3 PAIR #22AWG SHIELDED
ELECTRIC STRIKE – 2 PAIR #16AWG
AUDIBLE ALARM – 1 PAIR #22AWG
CARD / PROXIMITY READER – 3 PAIR SHIELDED #22AWG (OVERALL SHIELD)
CRASH BAR – 1 PAIR #22AWG
UNIVERSAL WASHROOM DURESS – 2 PAIR #22AWG
DOOR OPERATOR INTERFACE DEVICE – 3 PAIR SHIELDED #22AWG (OVERALL SHIELD)

(4) NOT USED

(5) 4 PAIR CAT 6 UTP DATA CABLE PROVIDED BY COMMUNICATIONS CONTRACTOR –3/4"C

(6) NOT USED

(7) ACCESS CONTROL SYSTEM SERVER SUPPLIED BY CLIENT AND INSTALLED AS PART OF THIS SCOPE OF WORK

(8) NOT USED

(9) EQUIPMENT CABINET PROVIDED BY COMMUNICATIONS CONTRACTOR

———— DENOTES NEW PROVIDED BY ELECTRICAL CONTRACTOR

– – – – – – – – DENOTES EXISTING TO REMAIN

–x–x–x–x–x–x– DENOTES EXISTING TO BE REMOVED BY ELECTRICAL CONTRACTOR

| DEVICE TYPE PROVIDED AS PART OF THIS SCOPE OF WORK | MANUFACTURER | SERIES / PART # | DRAWING SYMBOL / REFERENCE |
|---|---|---|---|
| 8 READERS C/W ENCLOSURE AND DUAL 10/100/1GB ETHERNET PORTS | | (N-15) | |
| POWER SUPPLY | | (N-15) | |
| BATTERY CABINET C/W 12V BATTERIES | | (N-15) | |
| READER | | (N-15) | CR |
| REQUEST TO EXIT DETECTOR | | (N-15) | MD |
| AUDIBLE ALARM / 2 TONE / INDOOR | | (N-15) | H |
| ELECTRIC STRIKE, 12/24V – BLACK | | (N-15) | ES |
| DOOR CONTACT | | (N-15) | DC |
| DOOR RELEASE | | (N-15) | DR |

(N-1) RISER IS DIAGRAMMATIC ONLY. PROVIDE QUANTITY OF POWER CIRCUITS, HARDWARE, MODULES, FIELD DEVICES, ACCESSORIES, WIRE, SECURITY CABLES, SOFTWARE, TESTING, LICENSES, PROGRAMMING, COMMISSIONS ETC, TO ENSURE A FULLY OPERATIONAL SECURITY SYSTEM. REFER TO DRAWING NO. E–017 AND TO FLOOR PLANS FOR ADDITIONAL REQUIREMENTS.

(N-2) REFER TO FLOOR PLAN DRAWINGS FOR DEVICE QUANTITY AND LOCATIONS.

(N-3) PROVIDE WIRES IN ACCORDANCE WITH THE MANUFACTURER'S RECOMMENDATIONS. MINIMUM WIRE REQUIREMENTS AS DETAILED ON RISER.

(N-4) ALL FIELD DEVICE WIRING TO BE PULLED AS HOMERUNS TO RESPECTIVE ACCESS CONTROL PANELS.

(N-5) NOT USED.

(N-6) CONTACT SECURITY MANUFACTURER FOR ADDITIONAL WIRE, CONDUIT, PULLBOX AND POWER REQUIREMENTS OVER AND ABOVE THOSE SHOWN ON DRAWING.

(N-7) PROVIDE DEDICATED FLOOR AND WALL PENETRATIONS. EXACT LOCATION OF ALL CORE DRILLS TO BE DETERMINED BY X–RAY RESULTS. X–RAYS MUST BE REVIEWED AND APPROVED BY LANDLORD AND STRUCTURAL ENGINEER PRIOR TO CORE DRILLING.

(N-8) PROVIDE QUANTITY OF CONTROL PANELS AND POWER SUPPLIES REQUIRED FOR A FULLY OPERATIONAL SECURITY SYSTEM. MINIMUM QUANTITY SHOWN.

(N-9) NOT USED.

(N-10) ALL CONTROL PANEL COVERS TO BE EQUIPPED WITH TAMPER SWITCHES.

(N-11) ALL CONDUITS ARE TO BE ROUTED IN THE CEILING SPACE.

(N-12) AS PART OF THIS SCOPE OF WORK SUPPLY FIFTY (50) ACCESS CONTROL SYSTEM KEY CARDS (PROXIMITY FUNCTIONALITY ON EACH AND EVERY KEY CARD). AS PART OF THE BASE BID PRICE TAKE PHOTOS, SET UP AND PROGRAM NEW DATABASE PROVIDED AS PART OF THIS SCOPE OF WORK, PRINT AND SET UP THIRTY–FIVE (35) ACCESS CONTROL SYSTEM KEY CARDS. OBTAIN RESPECTIVE SECURITY LEVEL AND ACCESS PRIVILEGE OF EACH CARD PROGRAMMED AS PART OF THIS SCOPE OF WORK FROM CLIENT. COORDINATE SCHEDULE ON SITE WITH CLIENT PRIOR TO COMMENCING WORK.

(N-13) AS PART OF THIS SCOPE OF WORK PROVIDE SOFTWARE BADGE PHOTO ID CAMERA, CARD PRINTER, REPORT PRINTER, LCD MONITOR, KEYBOARD, MOUSE, SOFTWARE PROGRAM, ETC. REFER TO SPECIFICATIONS FOR ADDITIONAL REQUIREMENTS.

(N-14) AS PART OF THIS SCOPE OF WORK PROVIDE AN INTERFACE BETWEEN CARD ACCESS CONTROL SYSTEM PROVIDED AS PART OF THIS SCOPE OF WORK AND CCTV SYSTEM PROVIDED AS PART OF THIS SCOPE OF WORK SUCH THAT THE CCTV SYSTEM IS INTERFACED WITH THE CARD ACCESS CONTROL SYSTEM PROVIDED AS PART OF THIS SCOPE OF WORK. PROVIDE ALL CARD ACCESS CONTROL SYSTEM AND CCTV SYSTEM LICENSES AND PROGRAMMING. PROVIDE ALL REQUIRED CARD ACCESS CONTROL SYSTEM COMPONENTS, ACCESSORIES, WIRING, OUTPUT CONTACTS, INPUT CONTACTS, ETC. FOR A FULLY OPERATIONAL SYSTEM.

(N-15) ACCESS CONTROL SYSTEM DEVICE TO BE SUPPLIED BY CLIENT AND INSTALLED AS PART OF THIS SCOPE OF WORK.

(N-16) NOT USED.

(N-17) NOT USED.

(N-18) EACH AND EVERY CONTROL PANEL PROVIDED AS PART OF THIS SCOPE OF WORK MUST BE FULLY CONFIGURED WITH ALL MODULES, ACCESSORIES, ETC. FOR EIGHT (8) CARD READERS.

(N-19) REFER TO REGIONAL MUNICIPALITY OF DURHAM CORPORATE POLICY AND PROCEDURES MANUAL – SECURITY SERVICES INSTALLATION AND SECURITY SYSTEM STANDARDS, GUIDELINE FOR ADDITIONAL REQUIREMENTS INCLUDING BUT NOT LIMITED TO APPROVED EQUIPMENT RACK/CABINET SELECTIONS, LABELING REQUIREMENTS, ETC OVER AND ABOVE THOSE DETAILED IN THIS DRAWING PACKAGE AND IN THE ELECTRICAL SPECIFICATIONS BOOK. CONTRACTOR SHALL BE RESPONSIBLE FOR AND MUST INCLUDE IN BASE BID PRICE FOR ALL SCOPES OF WORK DETAILED IN THE REGIONAL MUNICIPALITY OF DURHAM CORPORATE POLICY AND PROCEDURES MANUAL – SECURITY SERVICES INSTALLATION AND SECURITY SYSTEM STANDARDS, GUIDELINE, ELECTRICAL DRAWINGS AND ELECTRICAL SPECIFICATIONS BOOK. CONTACT REGIONAL MUNICIPALITY OF DURHAM SECURITY SERVICES SUPERVISOR @ SECURITY@DURHAM.CA FOR QUESTIONS REGARDING REGIONAL MUNICIPALITY OF DURHAM CORPORATE POLICY AND PROCEDURES MANUAL – SECURITY SERVICES INSTALLATION AND SECURITY SYSTEM STANDARDS, GUIDELINE DOCUMENT.

AS PART OF THIS SCOPE OF WORK SET UP ACCESS CONTROL SYSTEM KEY CARDS PROVIDED AS PART OF THIS SCOPE OF WORK, INCLUDING TAKING EMPLOYEE PHOTOS AND SETTING UP AND PROGRAMING NEW DATABASE PROVIDED AS PART OF THIS SCOPE OF WORK. ELECTRICAL CONTRACTOR SHALL COORDINATE, ORGANIZE AND SCHEDULE TIME TO TAKE PHOTOS OF ALL STAFF AT THE SITE. PROVIDE A BLUE CURTAIN BACKDROP, ALL REQUIRED LIGHTING AND ALL OTHER EQUIPMENT REQUIRED FOR PHOTO TAKING.

ALL MEASUREMENTS ARE TO BE VERIFIED BY THE CONTRACTOR ON SITE AND ANY DISCREPANCIES ARE TO BE REPORTED BEFORE PROCEEDING WITH THE WORK. THE REGION OF DURHAM ASSUMES NO RESPONSIBILITY FOR THE ACCURACY OF THE LOCATION OF EXISTING SERVICES AS INDICATED ON THIS DRAWING. DO NOT SCALE DRAWINGS.

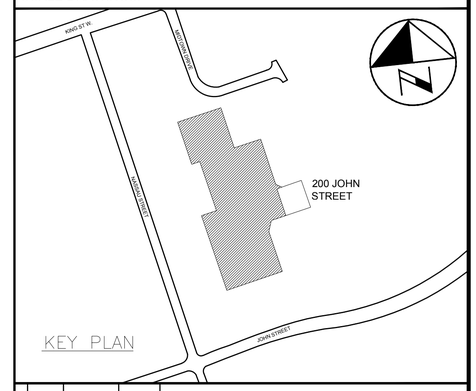


CONSULTANT REVISIONS

| NO. | DATE | NAME | REVISIONS |
|---|---|---|---|
| | | | |

PRIME CONSULTANT

BARRY BRYAN ASSOCIATES
Architects
Engineers
Project Managers
250 Water St.
Suite 201
Whitby, Ontario
L1N 0G5
Tel: (905) 666-5252
Fax: (905) 666-5256
e-mail: bba@bba-archeng.com

LICENSED PROFESSIONAL ENGINEER H.D. COHEN 90414335 FEB09/2021 PROVINCE OF ONTARIO

SUB–CONSULTANT

HCC ENGINEERING
DESIGN AND TECHNOLOGY SERVICES GROUP
HCC ENGINEERING LIMITED
40 EGLINTON AVENUE EAST, SUITE 600
TORONTO, ONTARIO, M4P 3A2
Tel: (416) 932-2423

LICENSED PROFESSIONAL ENGINEER X.P. CHEN 100219955 FEB09/2021 PROVINCE OF ONTARIO

HCC Project No.: 20104

| | |
|---|---|
| DESIGN BY: PC | SCALE: N.T.S. |
| DRAWN BY: TLR | DATE: 2020–05–01 |
| CHECKED BY: PC/HDC | CONSULTANT PROJECT NO. 20060 |
| APPROVED BY: HDC | |

CONTRACT REVISIONS

| NO. | DATE | NAME | REVISIONS |
|---|---|---|---|
| 3 | FEB09/2021 | HCC | ISSUED FOR PERMIT & TENDER |
| 2 | OCT30/2020 | HCC | ISSUED FOR 90% REVIEW |
| 1 | JUNE 1/20 | HCC | ISSUED FOR 60% REVIEW |

DURHAM REGION

THE REGIONAL MUNICIPALITY OF DURHAM
WORKS DEPARTMENT
DESIGN, CONSTRUCTION & ASSET MANAGEMENT

# RELOCATION OF DENTAL CLINIC TO 200 JOHN ST., OSHAWA

## ACCESS CONTROL SYSTEM RISER DIAGRAM

| PROPERTY NO. | FACILITY CODE | FACILITIES PROJECT NO. |
|---|---|---|
| N/A | LEA–O–07 | LEA–O–07–19–01 |
| CONTRACT NO. | DRAWING NO. | SHEET NO. |
| T–1032–2021 | E–018 | 051 |

F:\Projects 2020\20104\E-018D.dwg

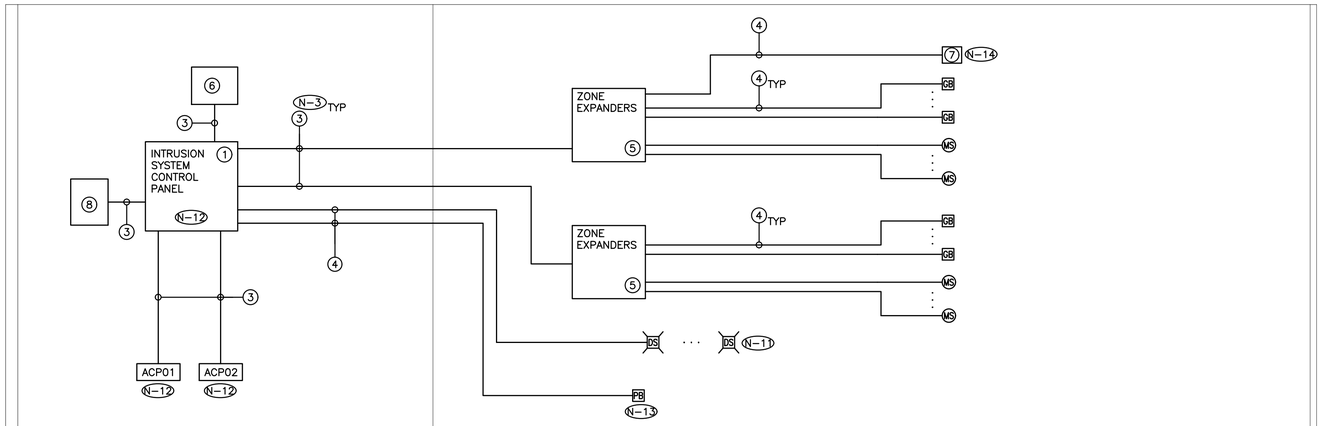


(N-1) RISER IS DIAGRAMMATIC ONLY. PROVIDE QUANTITY OF CONTROL PANELS, HARDWARE, DEVICES, POWER CIRCUITS, CONDUIT, WIRE, SECURITY CABLES, ETC, TO ENSURE A FULLY OPERATIONAL SECURITY SYSTEM INTRUSION AND CARD ACCESS CONTROL SYSTEM. MINIMUM REQUIREMENTS DETAILED ON DRAWING.

(N-2) REFER TO FLOOR PLAN DRAWINGS FOR DEVICE QUANTITY AND LOCATIONS.

(N-3) PROVIDE CONDUITS AND WIRES IN ACCORDANCE WITH THE MANUFACTURER'S RECOMMENDATIONS. MINIMUM CONDUIT SIZE AND WIRING REQUIREMENTS AS DETAILED ON RISER DIAGRAM.

(N-4) ALL INTRUSION SYSTEM DEVICES TO BE PULLED AS HOMERUNS TO ZONE EXPANDER. DO NOT DAISY CHAIN SECURITY SYSTEM INTRUSION BUS (COMBUS) BETWEEN DEVICES. TERMINATE ALL WIRING ONTO TERMINAL STRIPS AND LOOP WIRING AS REQUIRED AT JUNCTION BOX.

(N-5) ALL CONDUITS TO BE EMT. EMT COUPLING AND CONNECTORS SHALL BE T&B STEEL, SET SCREW TYPE. PROVIDE SPARE PULLSTRING IN ALL CONDUITS FOR FUTURE USE.

(N-6) ELECTRICAL CONTRACTOR SHALL NOT USE PULLBOXES AS SUBSTITUTES FOR 90° BENDS. 12" X 12" X 6" PULLBOXES C/W TYPE SNAKE EYE SECURITY SCREWS SHALL BE PROVIDED ON THE BASIS OF NOT MORE THAN TWO (2) RIGHT ANGLE BENDS OR NOT MORE THAN 100' IN STRAIGHT RUNS BETWEEN BOXES.

(N-7) CONTACT SECURITY MANUFACTURER FOR ADDITIONAL WIRE, CONDUIT, PULLBOX AND POWER REQUIREMENTS.

(N-8) ALL CONTROL PANEL COVERS TO BE EQUIPPED WITH TAMPER SWITCHES.

(N-9) EACH FIELD DEVICE SHALL BE PROGRAMMED AS AN INDIVIDUAL HARDWIRED ZONE. REFER TO SPECIFICATIONS FOR ADDITIONAL REQUIREMENTS.

(N-10) INTRUSION SYSTEM DEVICES TO BE SUPPLIED BY CLIENT AND INSTALLED AS PART OF THIS SCOPE OF WORK.

(N-11) PROVIDE END OF LINE RESISTOR FOR EACH STROBE CIRCUIT.

(N-12) PROVIDE ALL HARDWARE AND SOFTWARE REQUIRED TO FULLY INTEGRATE THE ACCESS CONTROL SYSTEM PROVIDED AS PART OF THIS SCOPE OF WORK WITH THE INTRUSION SYSTEM PROVIDED AS PART OF THIS SCOPE OF WORK.

(N-13) ACTIVATION OF PANIC BUTTON SHALL INITIATE THE CALL TO MONITORING STATION AND POLICE STATION. PROVIDE PROGRAMMING, SOFTWARE, HARDWARE, ETC. AS REQUIRED.

(N-14) UPON DETECTION OF AUTOMATED EXTERNAL DEFIBRILLATOR (AED) USE, THE INTRUSION SYSTEM SHALL INITIATE THE CALL TO MONITORING STATION AND POLICE STATION. PROVIDE PROGRAMMING, SOFTWARE, HARDWARE, ETC. AS REQUIRED.

(1) INTRUSION CONTROL PANEL SUPPLIED BY CLIENT AND INSTALLED AS PART OF THIS SCOPE OF WORK

(2) 18"W X 18"H X 10"D SECURITY SYSTEM JUNCTION BOX

(3) SECURITY SYSTEM COMMUNICATION BUS (WIRING PER MANUFACTURER'S RECOMMENDATION) – 3/4"C

(4) 2 PAIR #22AWG, PLENUM RATED, – 3/4"C

(5) INTRUSION CONTROL PANEL ZONE EXPANDER C/W ENCLOSURE

(6) 24VDC POWER SUPPLY FOR STROBE LIGHTS

(7) AUTOMATED EXTERNAL DEFIBRILLATOR (AED)

(8) GSM CELLULAR COMMUNICATIONS MODULE SUPPLIED BY CLIENT AND INSTALLED AS PART OF THIS SCOPE OF WORK

———— DENOTES NEW PROVIDED BY ELECTRICAL CONTRACTOR

– – – – – – – – DENOTES EXISTING TO REMAIN

–x–x–x–x–x–x–x– DENOTES EXISTING TO BE REMOVED BY ELECTRICAL CONTRACTOR

| DEVICE TYPE PROVIDED AS PART OF THIS SCOPE OF WORK | MANUFACTURER | SERIES / PART # | DRAWING SYMBOL / REFERENCE |
|---|---|---|---|
| INTRUSION SYSTEM CONTROL PANEL | | (N-10) | |
| POWER SUPPLY FOR STROBE LIGHTS | ALTRONIX | AL125UL | |
| INTRUSION SYSTEM MOTION SENSOR | | (N-10) | MS |
| INTRUSION SYSTEM GLASS BREAK DETECTOR | | (N-10) | GB |
| INTRUSION SYSTEM PANIC BUTTON | POTTER | HUB-M | PB |
| INTRUSION SYSTEM STROBE LIGHT | POTTER | CS-24 | DS |

ALL MEASUREMENTS ARE TO BE VERIFIED BY THE CONTRACTOR ON SITE AND ANY DISCREPANCIES ARE TO BE REPORTED BEFORE PROCEEDING WITH THE WORK. THE REGION OF DURHAM ASSUMES NO RESPONSIBILITY FOR THE ACCURACY OF THE LOCATION OF EXISTING SERVICES AS INDICATED ON THIS DRAWING. DO NOT SCALE DRAWINGS.

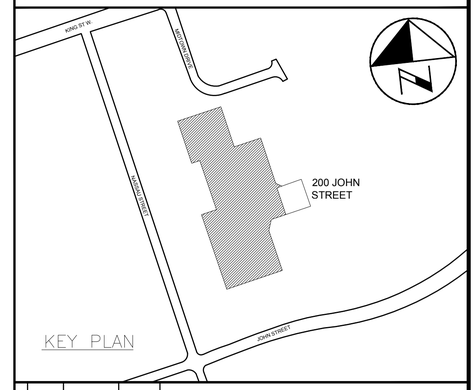


CONSULTANT REVISIONS

| NO. | DATE | NAME | REVISIONS |
|---|---|---|---|
| | | | |

PRIME CONSULTANT

BARRY BRYAN ASSOCIATES
Architects
Engineers
Project Managers
250 Water St.
Suite 201
Whitby, Ontario
L1N 0G5
Tel: (905) 666-5252
Fax: (905) 666-5256
e-mail: bba@bba-archeng.com

LICENSED PROFESSIONAL ENGINEER
H.D. COHEN
90414335
FEB09/2021
PROVINCE OF ONTARIO

SUB-CONSULTANT

HCC ENGINEERING
DESIGN AND TECHNOLOGY SERVICES GROUP
HCC ENGINEERING LIMITED
40 EGLINTON AVENUE EAST, SUITE 600
TORONTO, ONTARIO, M4P 3A2
Tel: (416) 932-2423

LICENSED PROFESSIONAL ENGINEER
X. P. CHEN
100219955
FEB09/2021
PROVINCE OF ONTARIO

HCC Project No.: 20104

| | |
|---|---|
| DESIGN BY: PC | SCALE N.T.S. |
| DRAWN BY: TLR | DATE: 2020-05-01 |
| CHECKED BY: PC/HDC | CONSULTANT PROJECT NO. 20060 |
| APPROVED BY: HDC | |

CONTRACT REVISIONS

| NO. | DATE | NAME | REVISIONS |
|---|---|---|---|
| 1 | FEB09/2021 | HCC | ISSUED FOR PERMIT & TENDER |

THE REGIONAL MUNICIPALITY OF DURHAM
WORKS DEPARTMENT
DESIGN, CONSTRUCTION & ASSET MANAGEMENT

# RELOCATION OF DENTAL CLINIC TO 200 JOHN ST., OSHAWA

## INTRUSION SYSTEM RISER DIAGRAM

| PROPERTY NO. | FACILITY CODE | FACILITIES PROJECT NO. |
|---|---|---|
| N/A | LEA-O-07 | LEA-O-07-19-01 |
| CONTRACT NO. | DRAWING NO. | SHEET NO. |
| T-1032-2021 | E-019 | 052 |

F:\Projects 2020\20104\E-019D.dwg

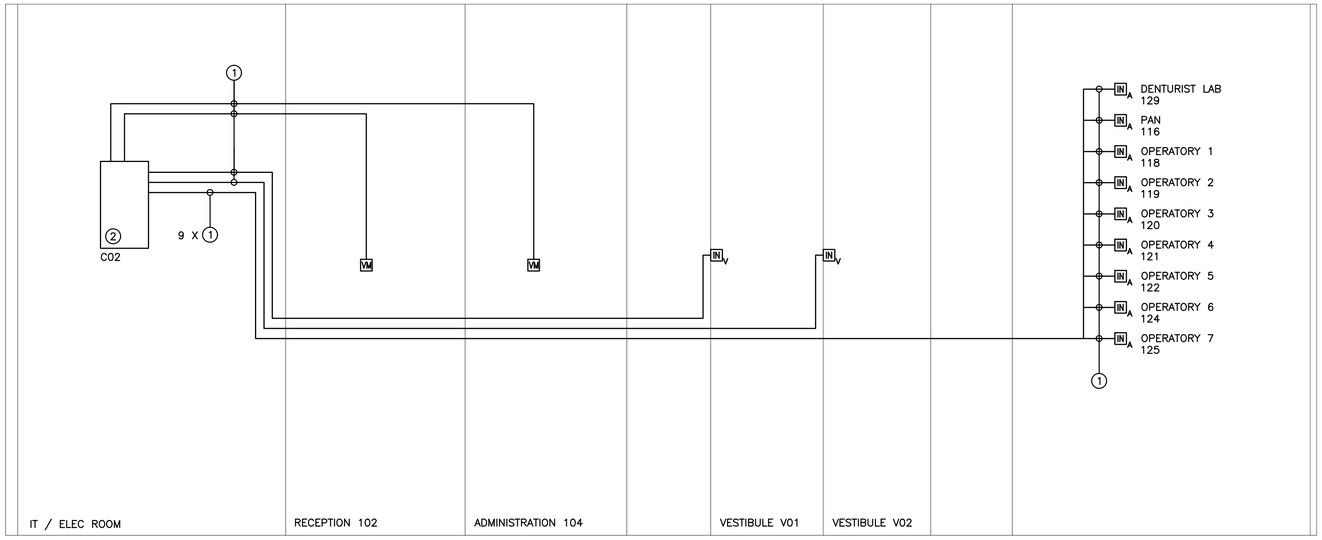


(N-1) DETAIL IS DIAGRAMMATIC ONLY. REFER TO DRAWING NO. E-010 FOR ADDITIONAL REQUIREMENTS, DEVICE QUANTITY AND LOCATION.

(N-2) ALL LOW VOLTAGE WIRING TO BE INSTALLED IN AN ENCLOSED CONDUIT SYSTEM.

(N-3) MINIMUM WIRING REQUIREMENTS SHOWN. PROVIDE ADDITIONAL WIRING AS PER MANUFACTURER'S RECOMMENDATIONS.

(N-4) CONTACT MANUFACTURER FOR SPECIFIC REQUIREMENTS TO TIE IN ALL COMPONENTS. PROVIDE APPROPRIATE ACCESSORIES AS REQUIRED FOR FULLY FUNCTIONAL INTERCOM SYSTEM.

(N-5) CONFIRM INTERFACE DEVICE REQUIREMENTS PRIOR TO ORDERING.

(N-6) CONTACT MANUFACTURER FOR SPECIFIC PROGRAMMING REQUIREMENTS REQUIREMENTS TO TIE IN ALL COMPONENTS. PROGRAM COMPONENTS AS REQUIRED FOR FULLY FUNCTIONAL INTERCOM SYSTEM.

(N-7) AS PART OF THIS SCOPE OF WORK, PROVIDE PROGRAMMING, OUTPUT, HARDWARE, SOFTWARE, ETC. AS REQUIRED TO ENSURE VIDEO INTERCOM SYSTEM PROVIDED AS PART OF THIS SCOPE OF WORK COMPLY WITH THE FOLLOWING SEQUENCE OF OPERATION:

PRESSING ON "VESTIBULE V01" DOOR STATION ONLY INITIATES COMMUNICATION REQUEST TO VIDEO INTERCOM MASTER STATION IN RECEPTION 102.

PRESSING ON "VESTIBULE V02" DOOR STATION ONLY INITIATES COMMUNICATION REQUEST TO VIDEO INTERCOM SUB-MASTER STATION IN ADMINISTRATION 104.

PRESS ON "DENTURIST LAB 129", "PAN 116", "OPERATORY 1 118", "OPERATORY 2 119", "OPERATORY 3 120", "OPERATORY 4 121", "OPERATORY 5 122", "OPERATORY 6 124", "OPERATORY 7 125" DOOR STATIONS ONLY INITIATES COMMUNICATION REQUEST TO VIDEO INTERCOM MASTER STATION IN RECEPTION 102.

(N-8) PROVIDE DEDICATED FLOOR AND WALL PENETRATIONS. EXACT LOCATION OF ALL CORE DRILLS TO BE DETERMINED BY X-RAY RESULTS. X-RAYS MUST BE REVIEWED AND APPROVED BY THE LANDLORD AND STRUCTURAL ENGINEER PRIOR TO CORE DRILLING.

(1) PLENUM RATED 4 PAIR CATEGORY 6 UTP DATA CABLE PROVIDED BY COMMUNICATIONS CONTRACTOR. RED IN COLOUR.

(2) EQUIPMENT CABINET PROVIDED BY COMMUNICATIONS CONTRACTOR

| DEVICE TYPE PROVIDED AS PART OF THIS SCOPE OF WORK | MANUFACTURER | SERIES / PART # | DRAWING SYMBOL / REFERENCE |
|---|---|---|---|
| INTERCOM SYSTEM MASTER STATION | AIPHONE | IX-MV7-HB | VM |
| INTERCOM SYSTEM VIDEO DOOR STATION | AIPHONE | IX-EA | IN V |
| INTERCOM SYSTEM AUDIO DOOR STATION | AIPHONE | IX-SS-2G | VM A |

———————— DENOTES NEW PROVIDED BY ELECTRICAL CONTRACTOR

– – – – – – – – – DENOTES EXISTING TO REMAIN

-x-x-x-x-x-x-x- DENOTES EXISTING TO BE REMOVED BY ELECTRICAL CONTRACTOR

ALL MEASUREMENTS ARE TO BE VERIFIED BY THE CONTRACTOR ON SITE AND ANY DISCREPANCIES ARE TO BE REPORTED BEFORE PROCEEDING WITH THE WORK. THE REGION OF DURHAM ASSUMES NO RESPONSIBILITY FOR THE ACCURACY OF THE LOCATION OF EXISTING SERVICES AS INDICATED ON THIS DRAWING. DO NOT SCALE DRAWINGS.

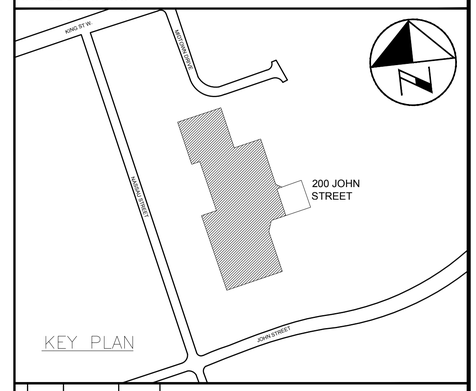


CONSULTANT REVISIONS

| NO. | DATE | NAME | REVISIONS |
|---|---|---|---|
| | | | |

PRIME CONSULTANT

BARRY BRYAN ASSOCIATES
Architects
Engineers
Project Managers
250 Water St.
Suite 201
Whitby, Ontario
L1N 0G5
Tel: (905) 666-5252
Fax: (905) 666-5256
e-mail: bba@bba-archeng.com

LICENSED PROFESSIONAL ENGINEER
H.D. COHEN
90414335
FEB09/2021
PROVINCE OF ONTARIO

SUB-CONSULTANT

HCC ENGINEERING
DESIGN AND TECHNOLOGY SERVICES GROUP
HCC ENGINEERING LIMITED
40 EGLINTON AVENUE EAST, SUITE 600
TORONTO, ONTARIO, M4P 3A2
Tel: (416) 932-2423

LICENSED PROFESSIONAL ENGINEER
X.P. CHEN
100219555
FEB09/2021
PROVINCE OF ONTARIO

HCC Project No.: 20104

| | |
|---|---|
| DESIGN BY: PC | SCALE N.T.S. |
| DRAWN BY: TLR | DATE: 2020-05-01 |
| CHECKED BY: PC/HDC | CONSULTANT PROJECT NO. 20060 |
| APPROVED BY: HDC | |

CONTRACT REVISIONS

| NO. | DATE | NAME | REVISIONS |
|---|---|---|---|
| 1 | FEB09/2021 | HCC | ISSUED FOR PERMIT & TENDER |

THE REGIONAL MUNICIPALITY OF DURHAM
WORKS DEPARTMENT
DESIGN, CONSTRUCTION & ASSET MANAGEMENT

# RELOCATION OF DENTAL CLINIC TO 200 JOHN ST., OSHAWA

## INTERCOM SYSTEM RISER DIAGRAM

| PROPERTY NO. | FACILITY CODE | FACILITIES PROJECT NO. |
|---|---|---|
| N/A | LEA-O-07 | LEA-O-07-19-01 |
| CONTRACT NO. | DRAWING NO. | SHEET NO. |
| T-1032-2021 | E-020 | 053 |

F:\Projects 2020\20104E-020C.dwg

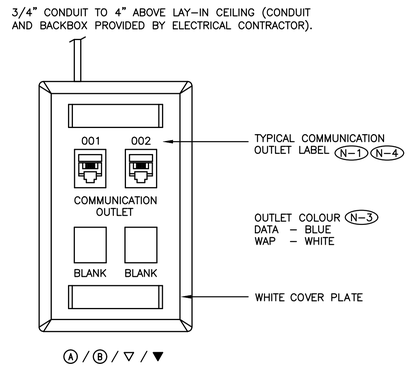


(N-1) PROVIDE BLANK INSERT FOR NON-UTILIZED OPENINGS. REFER TO FLOOR PLANS FOR EXACT QUANTITY OF CABLES AND OUTLETS AT EACH LOCATION.

(N-2) UTILIZE BLUE CABLES FOR DATA.

(N-3) CONFIRM OUTLET COLOUR AND ORIENTATION WITH CONSULTANT PRIOR TO ORDERING MATERIALS.

(N-4) CONFIRM LABELING SCHEME WITH CONSULTANT PRIOR TO PREPARING LABELS.

1 / T-001 TYPICAL WALL MOUNTED OFFICE GROUP OUTLET DETAIL
SCALE: NTS

| PATCH CORD LENGTH (N-1) | 1' | 4' | 7' | 10' |
|---|---|---|---|---|
| CAT6 COPPER PATCH CORDS REQUIRED - IT/ELECTRICAL ROOM END (N-3) | 0 | 48 | 48 | 35 |
| CAT6 COPPER PATCH CORDS REQUIRED - WORKSTATION/WAP END | 35 | 95 | 95 | 25 |
| CAT6 COPPER PATCH CORDS REQUIRED FOR CCTV/INTERCOM - CCTV/INTERCOM END (N-3) | 22 | 0 | 0 | 0 |
| CAT6 COPPER PATCH CORDS REQUIRED FOR CCTV/INTERCOM - IT / ELECTRICAL ROOM END | 0 | 22 | 0 | 0 |

PATCH CORD COLOUR CODING
DATA IN IT ROOM - BLUE
DATA AT WORKSTATION - GREEN
WAP - WHITE
CCTV CAMERA - RED

(N-1) SUPPLY AND INSTALL QUANTITY OF PATCH CORDS INDICATED IN SCHEDULE. CONFIRM EXACT LENGTH WITH CLIENT PRIOR TO ORDERING. AT EQUIPMENT CABINET END PATCH CORD LENGTHS SHALL BE SELECTED TO MINIMIZE SLACK.

(N-2) AS PART OF THIS SCOPE OF WORK COMMUNICATIONS CONTRACTOR SHALL PATCH ALL OWNER SUPPLIED SERVERS, SWITCHES, NETWORK GEAR, GATEWAYS, ETC. PATCHING SCHEDULE TO BE PROVIDED BY OWNER DURING CONSTRUCTION.

(N-3) LABEL PATCH CORDS AT BOTH ENDS.

2 / T-001 PATCH CORD SCHEDULE
SCALE: NTS

# LEGEND

| | |
|---|---|
| Ⓐ | WALL MOUNTED OFFICE GROUP CONSISTING OF DATA (1ST) OUTLET C/W ONE (1) 4 PAIR CAT6 UTP CABLE |
| Ⓑ | WALL MOUNTED OFFICE GROUP CONSISTING OF DATA (1ST), DATA (2ND), AND DATA (3RD) OUTLET C/W THREE (3) 4 PAIR CAT6 UTP CABLES. |
| Ⓒ | WALL MOUNTED OFFICE GROUP CONSISTING OF DATA (1ST) OUTLET C/W ONE (1) 4 PAIR CAT5E UTP CABLE. |
| Ⓓ | WALL MOUNTED OFFICE GROUP CONSISTING OF DATA (1ST), DATA (2ND) AND DATA (3RD) OUTLETS C/W THREE (3) 4 PAIR CAT5E UTP CABLES. |
| Ⓔ | WALL MOUNTED OFFICE GROUP CONSISTING OF DATA (1ST), DATA (2ND), DATA (3RD) AND DATA (4TH) OUTLETS C/W FOUR (4) 4 PAIR CAT5E UTP CABLES. |
| Ⓕ | WALL MOUNTED OFFICE GROUP CONSISTING OF DATA (1ST), DATA (2ND), DATA (3RD), DATA (4TH) AND DATA (5TH) OUTLETS C/W FIVE (5) 4 PAIR CAT5E UTP CABLES. |
| Ⓜ | CEILING MOUNTED WAP GROUP CONSISTING OF DATA (1ST) AND DATA (2ND) OUTLETS C/W TWO (2) 4 PAIR CAT6 UTP CABLES. PROVIDE ONE (1) SIDE ENTRY OUTLET BOX - BELDEN MDVO A0645271. |
| -Ⓐ- | FURNITURE MOUNTED OFFICE GROUP CONSISTING OF DATA (1ST) OUTLET C/W ONE (1) 4 PAIR CAT6 UTP CABLE |
| [A] | FLOOR MOUNTED OFFICE GROUP CONSISTING OF DATA (1ST) AND DATA (2ND) OUTLET C/W TWO (2) 4 PAIR CAT6 UTP CABLES. |
| CCTV ▽ | CEILING MOUNTED CCTV CAMERA OUTLET CONSISTING OF DATA (1ST) OUTLET C/W ONE (1) 4 PAIR CAT6 UTP CABLE. PROVIDE ONE (1) BELDEN REVCONNECT CAT6 FLEXPLUG RV6FFPUEW18-S1 |
| INTERCOM ▽ | WALL MOUNTED INTERCOM STATION OUTLET CONSISTING OF DATA (1ST) OUTLET C/W ONE (1) 4 PAIR CAT6 UTP CABLE. |
| ▽ | DATA OUTLET C/W ONE (1) 4 PAIR CAT6 UTP CABLE |
| ▼ | VOICE OUTLET C/W ONE (1) 4 PAIR CAT6 UTP CABLE |
| ◒ | DENOTES LOCATION OF WALL MOUNTED CABLE ENTRY FOR SYSTEMS FURNITURE. |
| ◪ | DENOTES LOCATION OF FLOOR MOUNTED CABLE ENTRY FOR SYSTEMS FURNITURE. |
| ER | DENOTES EXISTING DEVICE TO BE REMOVED BACK TO SOURCE. |
| W | DENOTES MOUNTING HEIGHT TO BE IN LINE WITH LIGHT SWITCHES. PROVIDE WALL MOUNTED PHONE FACEPLATE. |
| CL | DENOTES CEILING MOUNTED. PROVIDE SURFACE MOUNT BACKBOX. |
| TV | DENOTES OUTLET MOUNTED ADJACENT TO TV / LCD DISPLAY. |
| WP | DENOTES NEMA TYPE 4X ENCLOSURE SUITABLE FOR HOSE DIRECTED WATER. |

ALL MEASUREMENTS ARE TO BE VERIFIED BY THE CONTRACTOR ON SITE AND ANY DISCREPANCIES ARE TO BE REPORTED BEFORE PROCEEDING WITH THE WORK. THE REGION OF DURHAM ASSUMES NO RESPONSIBILITY FOR THE ACCURACY OF THE LOCATION OF EXISTING SERVICES AS INDICATED ON THIS DRAWING. DO NOT SCALE DRAWINGS.

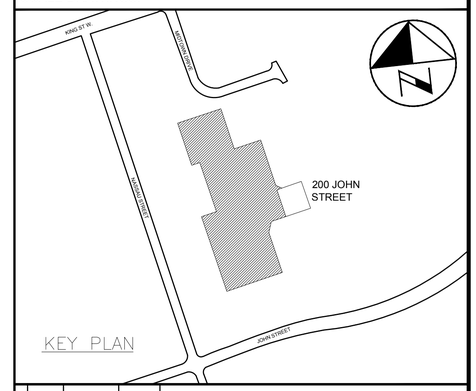


| NO. | DATE | NAME | REVISIONS |
|---|---|---|---|
| | | | |

CONSULTANT REVISIONS

PRIME CONSULTANT

BARRY BRYAN ASSOCIATES
Architects
Engineers
Project Managers
250 Water St.
Suite 201
Whitby, Ontario
L1N 0G5
Tel: (905) 666-5252
Fax: (905) 666-5256
e-mail: bba@bba-archeng.com

NETWORK TECHNOLOGY SYSTEMS DESIGNER Bicsi HOWARD COHEN BICSI ID # 107487 Expires 12-31-23

LICENSED PROFESSIONAL ENGINEER H.D. COHEN 90414335 FEB.09/2021 PROVINCE OF ONTARIO

SUB-CONSULTANT

HCC ENGINEERING
DESIGN AND TECHNOLOGY SERVICES GROUP
HCC ENGINEERING LIMITED
40 EGLINTON AVENUE EAST, SUITE 600
TORONTO, ONTARIO, M4P 3A2
Tel: (416) 932-2423

LICENSED PROFESSIONAL ENGINEER X. P. CHEN 100219955 FEB.09/2021 PROVINCE OF ONTARIO

HCC Project No.: 20104

| | |
|---|---|
| DESIGN BY: PC | SCALE: AS SHOWN |
| DRAWN BY: TLR | DATE: 2020-05-01 |
| CHECKED BY: PC/HDC | CONSULTANT PROJECT NO. 20060 |
| APPROVED BY: HDC | |

| NO. | DATE | NAME | REVISIONS |
|---|---|---|---|
| 3 | FEB09/2021 | HCC | ISSUED FOR TENDER |
| 2 | OCT30/2020 | HCC | ISSUED FOR 90% REVIEW |
| 1 | MAYXX/2020 | HCC | ISSUED FOR REVIEW |

CONTRACT REVISIONS

1. SUBSTITUTES ARE NOT PERMITTED FOR ALL SPECIFIED PRODUCTS.
2. SHOP DRAWINGS ARE REQUIRED FOR ALL PRODUCTS SPECIFIED FOR THIS PROJECT INCLUDING BUT NOT LIMITED TO EQUIPMENT CABINETS, UPS'S, HORIZONTAL CABLES, PDU'S, PATCH PANELS, HORIZONTAL MANAGERS, BACKBONE CABLES, TERMINATION HARDWARE, LABELS AND FACEPLATES.
3. COMMUNICATIONS CONTRACTOR AND ALL SUBCONTRACTORS MUST READ AND COMPLY WITH COMMUNICATIONS SPECIFICATIONS (ISSUED AS A SEPARATE DOCUMENT).
4. INSTALLATION OF ALL DEVICES AND SERVICES MUST COMPLY WITH ALL LOCAL SEISMIC RESTRAINT REQUIREMENTS.
5. ALL SCOPES OF WORK REQUIRED TO BE COMPLETED WITHIN OCCUPIED AREAS, INCLUDING WORK RELATED TO DEFICIENCIES MUST BE COMPLETED BETWEEN 11PM AND 5AM DURING THE WEEK. REMOVAL AND REINSTALLATION OF CEILING TILES IN THE OCCUPIED AREAS TO ACCOMMODATE ALL SCOPES OF WORK SHALL BE PROVIDED BY THE COMMUNICATIONS CONTRACTOR.
6. AS BUILT DRAWING REQUIREMENTS:
   - AS BUILT DRAWINGS TO BE PREPARED AND SUBMITTED IN AUTOCAD FORMAT BY THE COMMUNICATIONS CONTRACTOR.
   - ALL DEMOLITION SCOPES OF WORK ARE TO BE ERASED FROM AS BUILT DRAWINGS.
   - ROUTING OF MAIN STATION CABLING RUNS, BACKBONE CABLES, ETC, TO BE SHOWN ON AS BUILT DRAWINGS.

   REFER TO DRAWINGS AND SPECIFICATIONS FOR ADDITIONAL REQUIREMENTS.
7. REFER TO REGIONAL MUNICIPALITY OF DURHAM - NETWORK STANDARDS FOR ADDITIONAL REQUIREMENTS INCLUDING BUT NOT LIMITED TO APPROVED EQUIPMENT RACK/CABINET SELECTIONS, LABELING REQUIREMENTS, ETC. OVER AND ABOVE THOSE DETAILED IN THIS DRAWING PACKAGE AND IN THE COMMUNICATIONS SPECIFICATIONS. CONTRACTOR SHALL BE RESPONSIBLE FOR AND MUST INCLUDE IN BASE BID PRICE FOR ALL SCOPES OF WORK DETAILED IN THE REGIONAL MUNICIPALITY OF DURHAM - NETWORK STANDARDS, COMMUNICATIONS DRAWINGS AND COMMUNICATIONS SPECIFICATIONS. CONTACT REGIONAL MUNICIPALITY OF DURHAM CS-IT STAFF FOR QUESTIONS REGARDING REGIONAL MUNICIPALITY OF DURHAM - NETWORK STANDARDS DOCUMENT.
8. AT THE COMPLETION OF THIS PROJECT, MANUFACTURER MUST PROVIDE A BELDEN CABLING CERTIFICATION PLAQUE FOR THE IT / ELECTRICAL ROOM. FOR ADDITIONAL DETAILS AND REQUIREMENTS CONTACT MARY MELCHIORRE BELDEN CANADA INC. mary.melchiorre@belden.com.

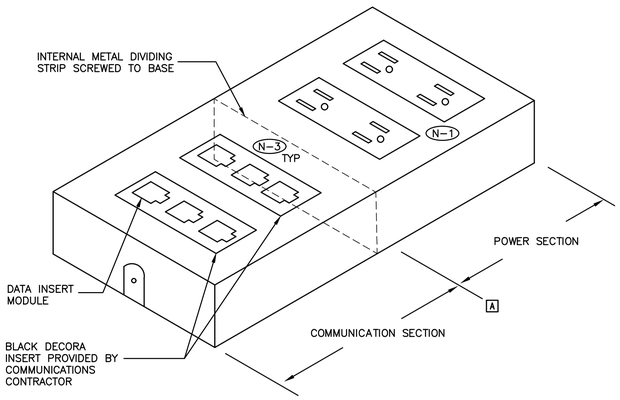


(N-1) RECEPTACLES AND FLOOR BOX PROVIDED BY ELECTRICAL CONTRACTOR

(N-2) UTILIZE BLUE CABLES FOR DATA.

(N-3) PROVIDE BLANK INSERT FOR NON-UTILIZED OPENINGS.

3 / T-001 TYPICAL FLOOR MOUNTED OFFICE GROUP OUTLET DETAIL
SCALE: NTS

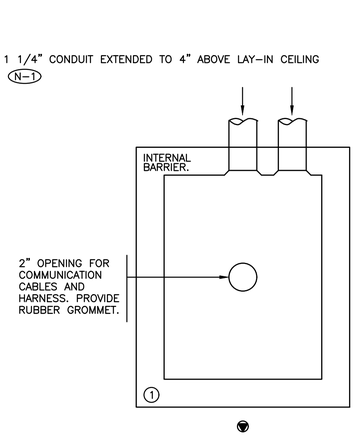


(N-1) CONDUIT, BACKBOXES AND COVERPLATES PROVIDED BY ELECTRICAL CONTRACTOR.

(1) THREE (3) GANG BACKBOX FOR DATA C/W COVERPLATE PROVIDED BY ELECTRICAL CONTRACTOR

4 / T-001 WALL MOUNTED SYSTEMS FURNITURE CONNECTION
SCALE: NTS

THE REGIONAL MUNICIPALITY OF DURHAM
WORKS DEPARTMENT
DESIGN, CONSTRUCTION & ASSET MANAGEMENT

# RELOCATION OF DENTAL CLINIC TO 200 JOHN ST., OSHAWA

## COMMUNICATIONS LEGEND AND DETAILS

| PROPERTY NO. | FACILITY CODE | FACILITIES PROJECT NO. |
|---|---|---|
| N/A | LEA-0-07 | LEA-0-07-19-01 |
| CONTRACT NO. | DRAWING NO. | SHEET NO. |
| T-1032-2021 | T-001 | 054 |

F:\Projects 2020\20104\T-001D.dwg

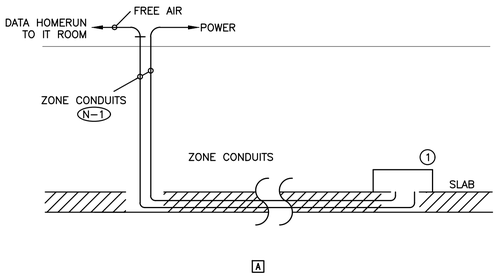


N-1 ZONE CONDUITS PROVIDED BY ELECTRICAL CONTRACTOR.

1 LOW PROFILE FLOOR BOX/RECESSED FLOOR MONUMENT/CONDUIT STUB UP/POKE THROUGH PROVIDED BY ELECTRICAL CONTRACTOR.

1 / T-002 FLOOR FEED SERVICES DETAIL
SCALE: NTS

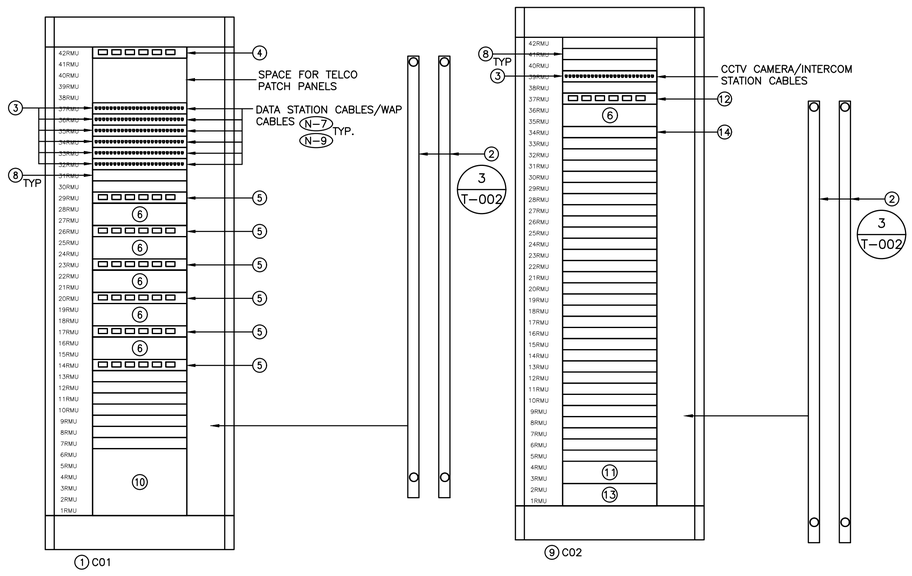


PROVIDE BLANKING PLATES FOR ALL UNUSED SPACES TO ENSURE AIR FLOW.

2 / T-002 EQUIPMENT CABINET ELEVATIONS
SCALE: NTS

N-1 DETAIL IS DIAGRAMMATIC ONLY. PROVIDE QUANTITY OF HORIZONTAL CABLING, CROSS CONNECT HARDWARE, PATCH CORDS, ETC, TO ENSURE A FULLY OPERATIONAL PREMISES WIRING SYSTEM.

N-2 REFER TO FLOOR PLAN DRAWINGS FOR DEVICE QUANTITY AND LOCATIONS.

N-3 REFER TO SPECIFICATIONS FOR ADDITIONAL EQUIPMENT RACK BUILD OUT DETAILS.

N-4 AS PART OF THIS SCOPE OF WORK COMMUNICATIONS CONTRACTOR SHALL RACK MOUNT ALL OWNER PROVIDED SWITCHES, SERVERS, POWER SUPPLIES, MODEMS, SPLITTERS, DIN RAILS, AUDIO BRIDGE, ETC. PROVIDE REQUIRED MOUNTING SCREWS.

N-5 BASE BID PRICE SHALL INCLUDE FOR A TOTAL OF 160 PATCHES WITHIN SERVER ROOM. REFER TO DETAIL NO. 2 ON DRAWING NO. T-001 FOR PATCH CORD QUANTITY AND LENGTHS.

N-6 INSTALL M6 CAGE NUTS IN TOP AND BOTTOM HOLE OF EACH RACK UNIT.

N-7 PATCH PANEL OUTLET COLOUR SHALL MATCH RESPECTIVE WALL JACK COLOUR. REFER TO DETAIL NO. 1 ON DRAWING NO. T-001 FOR COLOUR ASSIGNMENT.

N-8 NOT USED.

N-9 ROUTE DATA HORIZONTAL (FLOOR) CABLES AND INTERLINK CABLES TO RESPECTIVE RACK MOUNTED PATCH PANELS.

N-10 PROVIDE TWO (2) LAMACOID PLATES C/W RACK IDENTIFIER (FRONT: BLUE WITH WHITE SEMI GLOSS LETTERS AND BACK: RED WITH WHITE SEMI GLOSS LETTERS) FOR EACH RACK AND CABINET PROVIDED AND/OR INSTALLED AS PART OF THIS SCOPE OF WORK. UTILIZE RIVETS TO SECURELY FASTEN LAMACOIDS TO CABINETS. PROVIDE A SAMPLE FOR SIGN OFF.

1. 42RMU NETWORK EQUIPMENT CABINET PROVIDED AS PART OF THIS SCOPE OF WORK
2. VERTICAL POWER DISTRIBUTION UNIT (PDU) PROVIDED AS PART OF THIS SCOPE OF WORK
3. 1RMU 24 PORT CAT 6 FLAT UTP PATCH PANEL
4. 1RMU ROUTER PROVIDED BY SERVICE PROVIDER
5. 1RMU 24 PORT ACTIVE SWITCH PROVIDED BY OWNER
6. 2RMU HORIZONTAL MANAGER
7. NOT USED.
8. BLANKING PLATE
9. 42RMU SECURITY EQUIPMENT CABINET PROVIDED AS PART OF THIS SCOPE OF WORK
10. UPS SYSTEM SUPPLIED BY CLIENT AND INSTALLED AS PART OF THIS SCOPE OF WORK
11. 2RMU 1500VA UPS PROVIDED BY ELECTRICAL CONTRACTOR
12. 1RUM RACK MOUNTED 24 PORT POE CCTV SWITCH PROVIDED BY ELECTRICAL CONTRACTOR
13. 2RMU UPS BATTERY PROVIDED BY ELECTRICAL CONTRACTOR
14. 1RMU CCTV SYSTEM NETWORK STORAGE SERVERS PROVIDED BY ELECTRICAL CONTRACTOR

| EQUIPMENT RACK/ CABINET ID | PDU REQUIREMENTS (N-1) |
|---|---|
| C01 | 2 X TRIPP-LITE PDUMV20NET LX |
| C02 | 2 X TRIPP-LITE PDUMV20NET LX |

N-1 AS PART OF THIS SCOPE OF WORK COMMUNICATIONS CONTRACTOR TO SUPPLY AND INSTALL ALL PDU'S. PROVIDE ALL REQUIRED MOUNTING AND FASTENING ACCESSORIES.

N-2 AS PART OF THIS SCOPE OF WORK FASTEN / INSTALL PDU'S TO RESPECTIVE RACK/CABINET, ETC. PROVIDE ALL REQUIRED FASTENING CLIPS AND ACCESSORIES.

N-3 LABEL ALL PDU'S AND POWER CORD SETS WITH CIRCUIT NUMBER INCLUDING PANEL NAME OF RECEPTACLE BEING PLUGGED INTO.

3 / T-002 EQUIPMENT CABINET PDU SCHEDULE
SCALE: NTS

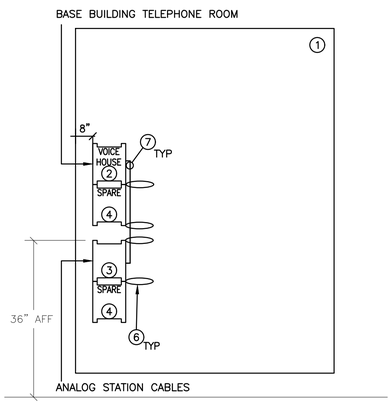


N-1 DETAIL IS DIAGRAMMATIC ONLY. PROVIDE QUANTITY OF HORIZONTAL CABLING, CROSS CONNECT HARDWARE, CROSS CONNECT WIRE, ETC, TO ENSURE A FULLY OPERATIONAL PERMISES WIRING SYSTEM.

N-2 PROVIDE A TOTAL OF 15 CROSS CONNECTS. CROSS CONNECT SCHEDULE TO BE PROVIDED BY PROJECT MANAGER ON AN AD HOC BASIS DURING CONSTRUCTION.

N-3 PROVIDE ALL 300 PAIR MOUNTS, HORIZONTAL MANAGEMENT AND VERTICAL MANAGEMENT SHOWN. ALL MOUNTS (EXCLUDING THOSE LABELED AS SPARE) SHALL BE FULLY POPULATED WITH CONNECTOR BLOCKS INDICATED AS PART OF THIS SCOPE OF WORK.

1. FIRE RATED PLYWOOD BACKBOARD PROVIDED BY ELECTRICAL CONTRACTOR.
2. PUNCH DOWN BLOCK ASSEMBLIES CONSISTING OF 300 PAIR MOUNTS AND 1A CONNECTOR BLOCKS
3. PUNCH DOWN BLOCK ASSEMBLIES CONSISTING OF 300 PAIR MOUNTS AND 4 PAIR MARKING DISTRIBUTION 1A4 CONNECTOR BLOCKS
4. PUNCH DOWN BLOCK ASSEMBLIES CONSISTING OF 300 PAIR MOUNTS
5. NOT USED
6. DISTRIBUTION RING
7. 1 PAIR CATEGORY 3 CROSS CONNECT WIRE

4 / T-002 VOICE MDF BACKBOARD LAYOUT
SCALE: NTS

ALL MEASUREMENTS ARE TO BE VERIFIED BY THE CONTRACTOR ON SITE AND ANY DISCREPANCIES ARE TO BE REPORTED BEFORE PROCEEDING WITH THE WORK. THE REGION OF DURHAM ASSUMES NO RESPONSIBILITY FOR THE ACCURACY OF THE LOCATION OF EXISTING SERVICES AS INDICATED ON THIS DRAWING. DO NOT SCALE DRAWINGS.

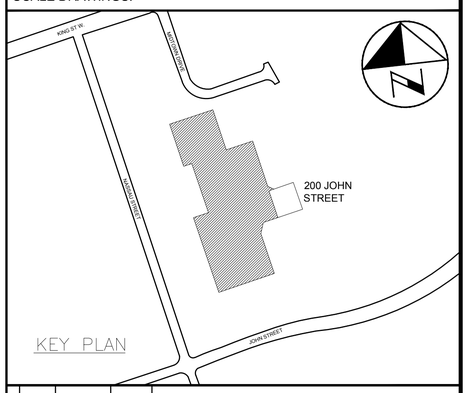


CONSULTANT REVISIONS

| NO. | DATE | NAME | REVISIONS |
|---|---|---|---|

PRIME CONSULTANT

BARRY BRYAN ASSOCIATES
Architects
Engineers
Project Managers
250 Water St.
Suite 201
Whitby, Ontario
L1N 0G5
Tel: (905) 666-5252
Fax: (905) 666-5256
e-mail: bba@bba-archeng.com

NETWORK TECHNOLOGY SYSTEMS DESIGNER
Bicsi
HOWARD COHEN
BICSI ID # 107487
Expires 12-31-21
NTS

LICENSED PROFESSIONAL ENGINEER
H.D. COHEN
90414335
FEB.09/2021
PROVINCE OF ONTARIO

SUB-CONSULTANT

HCC ENGINEERING
DESIGN AND TECHNOLOGY SERVICES GROUP
HCC ENGINEERING LIMITED
40 EGLINTON AVENUE EAST, SUITE 600
TORONTO, ONTARIO, M4P 3A2
Tel: (416) 932-2423

LICENSED PROFESSIONAL ENGINEER
X. P. CHEN
100219955
FEB.09/2021
PROVINCE OF ONTARIO

HCC Project No.: 20104

| | |
|---|---|
| DESIGN BY: PC | SCALE AS SHOWN |
| DRAWN BY: TLR | DATE: 2020-05-01 |
| CHECKED BY: PC/HDC | CONSULTANT PROJECT NO. 20060 |
| APPROVED BY: HDC | |

CONTRACT REVISIONS

| NO. | DATE | NAME | REVISIONS |
|---|---|---|---|
| 3 | FEB09/2021 | HCC | ISSUED FOR TENDER |
| 2 | OCT30/2020 | HCC | ISSUED FOR 90% REVIEW |
| 1 | MAYXX/2020 | HCC | ISSUED FOR REVIEW |

THE REGIONAL MUNICIPALITY OF DURHAM
WORKS DEPARTMENT
DESIGN, CONSTRUCTION & ASSET MANAGEMENT

# RELOCATION OF DENTAL CLINIC TO 200 JOHN ST., OSHAWA

## COMMUNICATIONS DETAILS

| PROPERTY NO. | FACILITY CODE | FACILITIES PROJECT NO. |
|---|---|---|
| N/A | LEA-O-07 | LEA-O-07-19-01 |
| CONTRACT NO. | DRAWING NO. | SHEET NO. |
| T-1032-2021 | T-002 | 055 |

F:\Projects 2020\2020104\T-002C.dwg

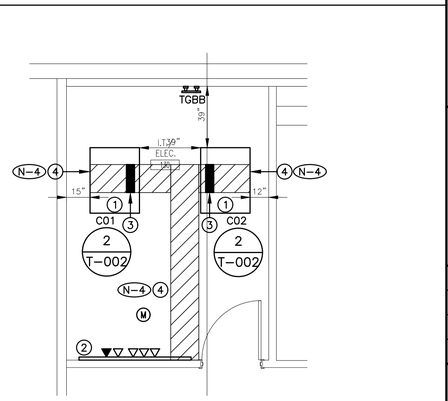


N-1 EXACT LOCATION OF DEVICES TO BE COORDINATED WITH ELECTRICAL CONTRACTOR.

N-2 NOT USED.

N-3 AS PART OF THIS SCOPE OF WORK PROVIDE AN ADDITIONAL FOUR (4) WALL/FURNITURE MOUNTED TYPE A OFFICE GROUPS (250' RUNS (TOTAL OF 250' CABLE) PER ADDITIONAL WALL/FURNITURE MOUNTED OFFICE GROUP) OVER AND ABOVE THOSE SHOWN ON DRAWING NO. T-004 ON AN AD HOC BASIS UP TO POST SUBSTANTIAL COMPLETION.

N-4 ALL CONDUITS PROVIDED BY ELECTRICAL CONTRACTOR SHALL BE C/W PULLSTRING. CONDUITS SHALL BE C/W BUSHINGS AND RUBBERIZED GROMMETS, ALL CONDUITS TO BE EMT. EMT COUPLING AND CONNECTORS SHALL BE T&B STEEL, SET SCREW TYPE.

N-5 PROVIDE 10' OF SLACK NEATLY COILED IN CEILING SPACE AT OUTLET END FOR EACH HORIZONTAL (STATION) CABLE PROVIDED AS PART OF THIS SCOPE OF WORK.

N-6 NOT USED.

N-7 COMMUNICATIONS CONTRACTOR SHALL INSTALL AND CONNECT SEVENTEEN (17) CEILING MOUNTED WIRELESS ACCESS POINTS SUPPLIED BY OWNER ON AN AD HOC BASIS THROUGHOUT THE FLOOR.

N-8 PROVIDE 10' OF SLACK NEATLY COILED IN CEILING SPACE FOR EACH HORIZONTAL (STATION) WAP GROUP CABLE PROVIDED AS PART OF THIS SCOPE OF WORK. TOTAL LENGTH OF EACH HORIZONTAL (STATION) CABLE RUN PROVIDED FOR WAP GROUP INCLUDING REDUNDANT SLACK SHALL NOT EXCEED 280'.

N-9 ALL STATION CABLES TO BE ROUTED INTO IT ROOM THROUGH CABLE TRAYS PROVIDED BY ELECTRICAL CONTRACTOR.

PRIOR TO ORDERING MATERIALS, COMMUNICATIONS CONTRACTOR TO PROVIDE ACCURATE CABLE PULL LENGTHS AND IDENTIFY ANY HORIZONTAL CABLE RUNS THAT WILL EXCEED 75M IN LENGTH.

(1) APPROXIMATE LOCATION TO TRANSITION SERVICES FROM FLOOR SLAB TO CEILING SPACE.

—··—··— DENOTES SLAB CONDUIT PROVIDED BY ELECTRICAL CONTRACTOR

N-1 EXACT LOCATION OF ALL DEVICES, INCLUDING EQUIPMENT RACKS AND RESPECTIVE HEIGHTS TO BE COORDINATED ON SITE WITH ELECTRICAL CONTRACTOR.

N-2 UTILIZE OVERHEAD CABLE TRAY PROVIDED BY ELECTRICAL CONTRACTOR TO ROUTE CABLES WITHIN IT ROOM.

N-3 PROVIDE 10' SERVICE LOOP NEATLY COILED IN CEILING SPACE AT IT ROOM END FOR EACH HORIZONTAL (STATION) CABLE PROVIDED AS PART OF THIS SCOPE OF WORK.

N-4 AS PART OF THIS SCOPE OF WORK COMMUNICATIONS CONTRACTOR SHALL PROVIDE 3 X 6" HIGH ACCESSORY CABLE RETAINING POSTS AS MANUFACTURED BY CPI FOR EACH 10' CABLE TRAY SECTION OF LADDER TYPE CABLE TRAYS PROVIDED BY ELECTRICAL CONTRACTOR.

(1) 42RMU EQUIPMENT RACK PROVIDED AS PART OF THIS SCOPE OF WORK

(2) VOICE MDF / SECURITY BACKBOARD PROVIDED BY ELECTRICAL CONTRACTOR

(3) STRINGER RADIUS DROP

(4) 18"W LADDER TYPE CABLE TRAY WITH 12" RUNG SPACING – TYPE UNIVERSAL CABLE RUNWAY AS MANUFACTURED BY CPI, BLACK IN COLOUR PROVIDED BY ELECTRICAL CONTRACTOR.

1 T-003 IT ROOM – COMMUNICATIONS PLAN
SCALE: 1:50

ALL MEASUREMENTS ARE TO BE VERIFIED BY THE CONTRACTOR ON SITE AND ANY DISCREPANCIES ARE TO BE REPORTED BEFORE PROCEEDING WITH THE WORK. THE REGION OF DURHAM ASSUMES NO RESPONSIBILITY FOR THE ACCURACY OF THE LOCATION OF EXISTING SERVICES AS INDICATED ON THIS DRAWING. DO NOT SCALE DRAWINGS.

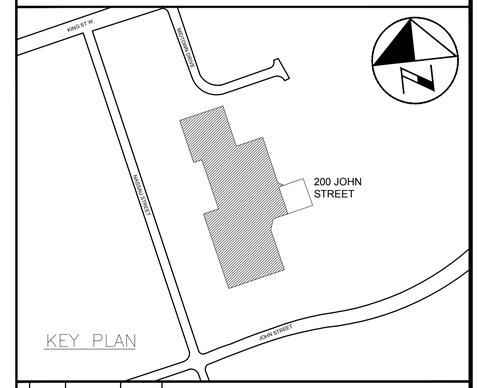


CONSULTANT REVISIONS

| NO. | DATE | NAME | REVISIONS |
|---|---|---|---|

PRIME CONSULTANT

BARRY BRYAN ASSOCIATES
Architects
Engineers
Project Managers
250 Water St.
Suite 201
Whitby, Ontario
L1N 0G5
Tel: (905) 666-5252
Fax: (905) 666-5256
e-mail: bba@bba-archeng.com

NETWORK TECHNOLOGY SYSTEMS DESIGNER
Bicsi
HOWARD COHEN
BICSI ID # 107487
Expires 12-31-23
NTS

LICENSED PROFESSIONAL ENGINEER
H.D. COHEN
90414335
FEB.09/2021
PROVINCE OF ONTARIO

SUB-CONSULTANT

HCC ENGINEERING
DESIGN AND TECHNOLOGY SERVICES GROUP
HCC ENGINEERING LIMITED
40 EGLINTON AVENUE EAST, SUITE 600
TORONTO, ONTARIO, M4P 3A2
Tel: (416) 932-2423

LICENSED PROFESSIONAL ENGINEER
X.P. CHEN
100219955
FEB.09/2021
PROVINCE OF ONTARIO

HCC Project No.: 20104

| | | | |
|---|---|---|---|
| DESIGN BY: | PC | SCALE | 1:100 |
| DRAWN BY: | TLR | DATE: | 2020-05-01 |
| CHECKED BY: | PC/HDC | CONSULTANT PROJECT NO. | 20060 |
| APPROVED BY: | HDC | | |

CONTRACT REVISIONS

| NO. | DATE | NAME | REVISIONS |
|---|---|---|---|
| 3 | FEB09/2021 | HCC | ISSUED FOR TENDER |
| 2 | OCT30/2020 | HCC | ISSUED FOR 90% REVIEW |
| 1 | MAYXX/2020 | HCC | ISSUED FOR REVIEW |

DURHAM REGION

THE REGIONAL MUNICIPALITY OF DURHAM
WORKS DEPARTMENT
DESIGN, CONSTRUCTION & ASSET MANAGEMENT

# RELOCATION OF DENTAL CLINIC TO 200 JOHN ST., OSHAWA

## COMMUNICATIONS PLAN

| PROPERTY NO. | FACILITY CODE | FACILITIES PROJECT NO. |
|---|---|---|
| N/A | LEA-O-07 | LEA-O-07-19-01 |
| CONTRACT NO. | DRAWING NO. | SHEET NO. |
| T-1032-2021 | T-003 | 056 |

F:\Projects 2020\20104\T-003C.dwg

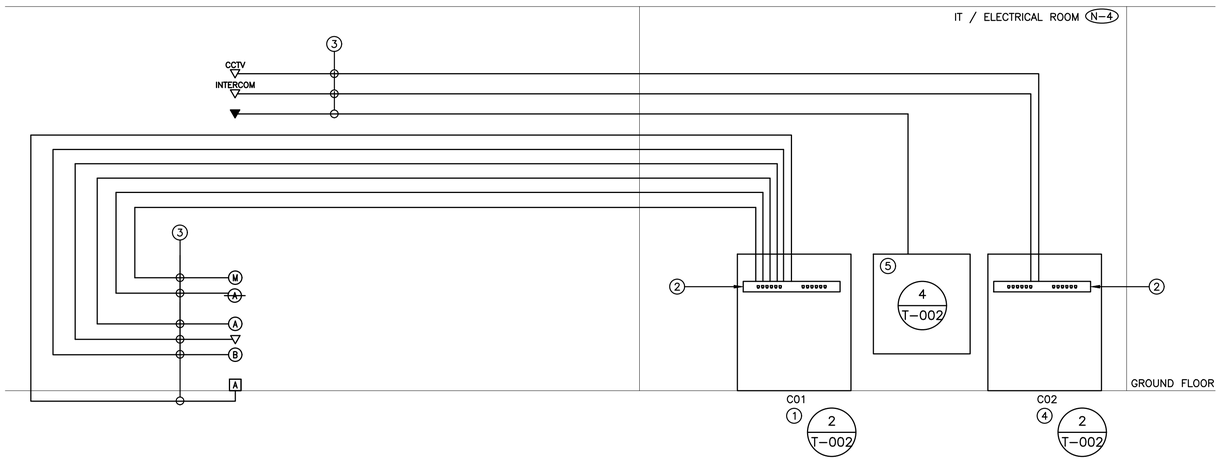


1 / T-004 COMMUNICATIONS HORIZONTAL CABLING WIRING SCHEMATIC
SCALE: NTS

N-1 SCHEMATIC IS DIAGRAMMATIC ONLY.

N-2 REFER TO FLOOR PLANS FOR EXACT LOCATION AND QUANTITY OF DEVICES.

N-3 PROVIDE DEDICATED FLOOR AND WALL PENETRATIONS FOR ENTIRE ROUTING OF DATA CABLES AND COAX CABLES PROVIDED AS PART OF THIS SCOPE OF WORK. EXACT LOCATION OF ALL CORE DRILLS TO BE DETERMINED BY X-RAY RESULTS. X-RAYS MUST BE REVIEWED AND APPROVED BY LANDLORD PRIOR TO CORE DRILLING.

N-4 UTILIZE OVERHEAD CABLE TRAY PROVIDED BY ELECTRICAL CONTRACTOR TO ROUTE CABLES WITHIN IT ROOM.

1. NETWORK EQUIPMENT CABINET PROVIDED AS PART OF THIS SCOPE OF WORK
2. TYPICAL RACK MOUNTED COPPER PATCH PANEL PROVIDED AS PART OF THIS SCOPE OF WORK
3. TYPICAL 4 PAIR CAT 6 UTP DATA CABLES PROVIDED AS PART OF THIS SCOPE OF WORK
4. SECURITY EQUIPMENT CABINET PROVIDED AS PART OF THIS SCOPE OF WORK
5. VOICE MDF BACKBOARD PROVIDED AS PART OF THIS SCOPE OF WORK

———— DENOTES NEW PROVIDED BY COMMUNICATIONS CONTRACTOR

– – – – – – – DENOTES EXISTING TO REMAIN

-X- -X- -X- -X- DENOTES EXISTING TO BE REMOVED BY COMMUNICATIONS CONTRACTOR

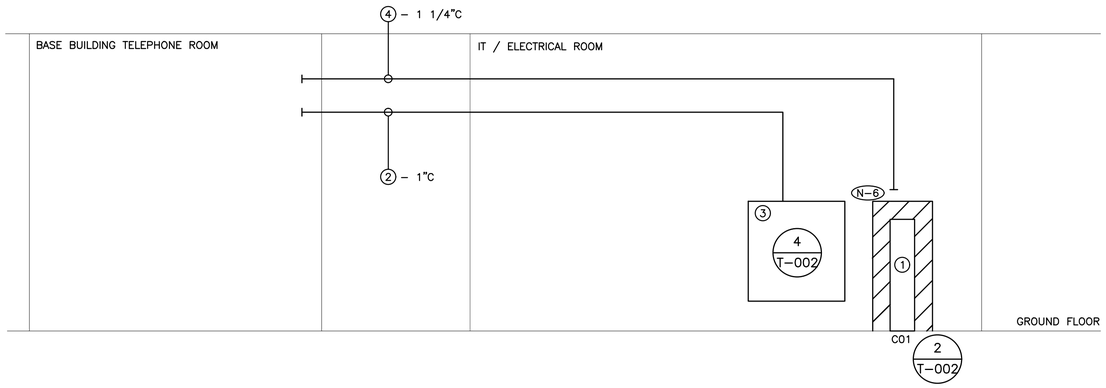


2 / T-004 COMMUNICATIONS RISER DIAGRAM
SCALE: NTS

N-1 RISER IS DIAGRAMMATIC ONLY.

N-2 ALL CONDUITS PROVIDED BY THE ELECTRICAL CONTRACTOR ARE TO BE ROUTED IN THE CEILING SPACE.

N-3 CONDUIT RACEWAYS PROVIDED BY ELECTRICAL CONTRACTOR. ALL CONDUITS SHALL BE C/W BUSHINGS AND RUBBERIZED GROMMETS. ALL CONDUITS TO BE EMT. EMT COUPLING AND CONNECTORS SHALL BE T&B STEEL, SET SCREW TYPE. PROVIDE PULLSTRING IN ALL CONDUITS FOR FUTURE USE.

N-4 NOT USED.

N-5 PROVIDE DEDICATED FLOOR AND WALL PENETRATIONS FOR ENTIRE ROUTING OF HOUSE CABLES PROVIDED AS PART OF THIS SCOPE OF WORK. EXACT LOCATION OF ALL CORE DRILLS TO BE DETERMINED BY X-RAY RESULTS. X-RAYS MUST BE REVIEWED AND APPROVED BY LANDLORD PRIOR TO CORE DRILLING.

N-6 UTILIZE OVERHEAD CABLE TRAY PROVIDED BY ELECTRICAL CONTRACTOR TO ROUTE CABLES WITHIN IT ROOM.

1. 42RMU NETWORK EQUIPMENT CABINET PROVIDED AS PART OF THIS SCOPE OF WORK
2. 25 PAIR BACKBONE CABLE PROVIDED AS PART OF THIS SCOPE OF WORK
3. VOICE MDF / SECURITY BACKBOARD PROVIDED BY ELECTRICAL CONTRACTOR
4. 12SMF FIBER OPTIC CABLE PROVIDED AS PART OF THIS SCOPE OF WORK

———— DENOTES NEW PROVIDED BY COMMUNICATIONS CONTRACTOR

– – – – – – – DENOTES EXISTING TO REMAIN

-X- -X- -X- -X- DENOTES EXISTING TO BE REMOVED BY COMMUNICATIONS CONTRACTOR

ALL MEASUREMENTS ARE TO BE VERIFIED BY THE CONTRACTOR ON SITE AND ANY DISCREPANCIES ARE TO BE REPORTED BEFORE PROCEEDING WITH THE WORK. THE REGION OF DURHAM ASSUMES NO RESPONSIBILITY FOR THE ACCURACY OF THE LOCATION OF EXISTING SERVICES AS INDICATED ON THIS DRAWING. DO NOT SCALE DRAWINGS.

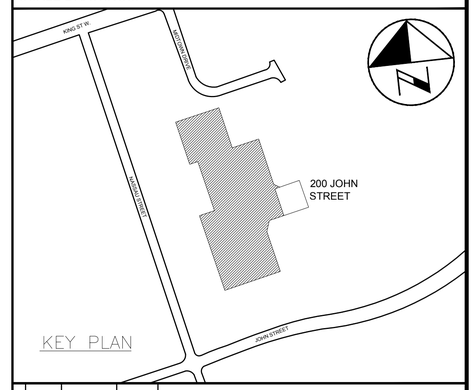


CONSULTANT REVISIONS

| NO. | DATE | NAME | REVISIONS |
|---|---|---|---|
| | | | |

CONTRACT REVISIONS

| NO. | DATE | NAME | REVISIONS |
|---|---|---|---|
| 3 | FEB09/2021 | HCC | ISSUED FOR TENDER |
| 2 | OCT30/2020 | HCC | ISSUED FOR 90% REVIEW |
| 1 | MAYXX/2020 | HCC | ISSUED FOR REVIEW |

PRIME CONSULTANT

BARRY BRYAN ASSOCIATES
Architects
Engineers
Project Managers
250 Water St.
Suite 201
Whitby, Ontario
L1N 0G5
Tel: (905) 666-5252
Fax: (905) 666-5256
e-mail: bba@bba-archeng.com

NETWORK TECHNOLOGY SYSTEMS DESIGNER
Bicsi
HOWARD COHEN
BICSI ID # 107487
Expires 12-31-23
NTS

LICENSED PROFESSIONAL ENGINEER
H.D. COHEN
90414335
FEB.09/2021
PROVINCE OF ONTARIO

SUB-CONSULTANT

HCC ENGINEERING
DESIGN AND TECHNOLOGY SERVICES GROUP
HCC ENGINEERING LIMITED
40 EGLINTON AVENUE EAST, SUITE 600
TORONTO, ONTARIO, M4P 3A2
Tel: (416) 932-2423

LICENSED PROFESSIONAL ENGINEER
X. P. CHEN
100219955
FEB.09/2021
PROVINCE OF ONTARIO

HCC Project No.: 20104

| | |
|---|---|
| DESIGN BY: PC | SCALE AS SHOWN |
| DRAWN BY: TLR | DATE: 2020-05-01 |
| CHECKED BY: PC/HDC | CONSULTANT PROJECT NO. 20060 |
| APPROVED BY: HDC | |

THE REGIONAL MUNICIPALITY OF DURHAM
WORKS DEPARTMENT
DESIGN, CONSTRUCTION & ASSET MANAGEMENT

# RELOCATION OF DENTAL CLINIC TO 200 JOHN ST., OSHAWA

## COMMUNICATIONS RISER DIAGRAM AND WIRING SCHEMATIC

| PROPERTY NO. | FACILITY CODE | FACILITIES PROJECT NO. |
|---|---|---|
| N/A | LEA-0-07 | LEA-0-07-19-01 |
| CONTRACT NO. | DRAWING NO. | SHEET NO. |
| T-1032-2021 | T-004 | 057 |

F:\Projects 2020\20104\T-004C.dwg

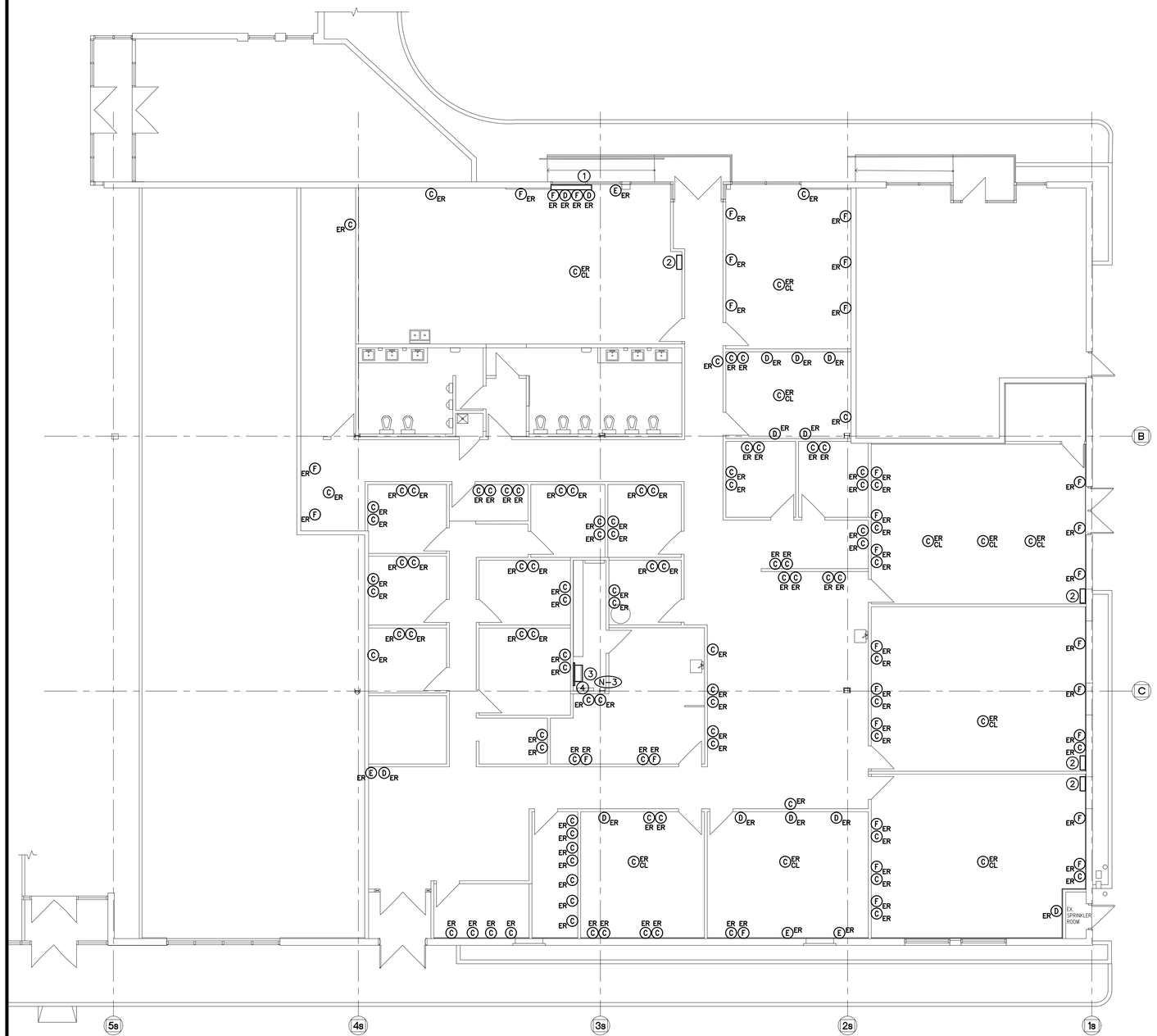


N-1 REMOVE AND DISPOSE OF ALL EXISTING CABLES, OUTLETS, TERMINATION HARDWARE, ETC. DO NOT REUSE / RELOCATE EXISTING CABLES, OUTLETS, TERMINATION HARDWARE, ETC.

N-2 AS PART OF THIS SCOPE OF WORK REMOVE AN ADDITIONAL FIVE (5) OFFICE GROUP 'F' OVER AND ABOVE THOSE SHOWN ON DRAWING NO. T-005 ON AN AD HOC BASIS.

N-3 REMOVE VERTICAL MOUNTED CABLE TRAYS AS PART OF THIS SCOPE OF WORK.

1. EXISTING SURFACE MOUNTED METAL RACEWAY TO BE REMOVED BY ELECTRICAL CONTRACTOR
2. EXISTING WALL MOUNTED CLASSROOM EQUIPMENT CABINET C/W PATCH PANELS TO BE REMOVED AS PART OF THIS SCOPE OF WORK
3. EXISTING WALL MOUNTED NETWORK EQUIPMENT CABINET C/W SIX (6) 24-PORT PATCH PANELS TO BE REMOVED AS PART OF THIS SCOPE OF WORK
4. EXISTING COMMUNICATIONS BACKBOARD C/W PUNCH DOWN BLOCK ASSEMBLIES TO BE REMOVED AS PART OF THIS SCOPE OF WORK

ALL MEASUREMENTS ARE TO BE VERIFIED BY THE CONTRACTOR ON SITE AND ANY DISCREPANCIES ARE TO BE REPORTED BEFORE PROCEEDING WITH THE WORK. THE REGION OF DURHAM ASSUMES NO RESPONSIBILITY FOR THE ACCURACY OF THE LOCATION OF EXISTING SERVICES AS INDICATED ON THIS DRAWING. DO NOT SCALE DRAWINGS.

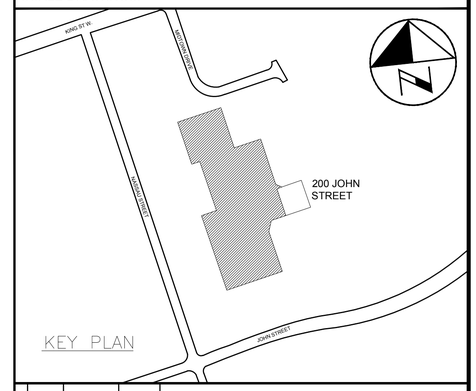


CONSULTANT REVISIONS

| NO. | DATE | NAME | REVISIONS |
|---|---|---|---|

PRIME CONSULTANT

BARRY BRYAN ASSOCIATES
Architects
Engineers
Project Managers
250 Water St.
Suite 201
Whitby, Ontario
L1N 0G5
Tel: (905) 666-5252
Fax: (905) 666-5256
e-mail: bba@bba-archeng.com

NETWORK TECHNOLOGY SYSTEMS DESIGNER
Bicsi
HOWARD COHEN
BICSI ID # 107487
Expires 12-31-23

LICENSED PROFESSIONAL ENGINEER
H.D. COHEN
90414335
FEB.09/2021
PROVINCE OF ONTARIO

SUB-CONSULTANT

HCC ENGINEERING
DESIGN AND TECHNOLOGY SERVICES GROUP
HCC ENGINEERING LIMITED
40 EGLINTON AVENUE EAST, SUITE 600
TORONTO, ONTARIO, M4P 3A2
Tel: (416) 932-2423

LICENSED PROFESSIONAL ENGINEER
X. P. CHEN
100219955
FEB.09/2021
PROVINCE OF ONTARIO

HCC Project No.: 20104

| | |
|---|---|
| DESIGN BY: PC | SCALE 1:100 |
| DRAWN BY: TLR | DATE: 2020-05-01 |
| CHECKED BY: PC/HDC | CONSULTANT PROJECT NO. 20060 |
| APPROVED BY: HDC | |

CONTRACT REVISIONS

| NO. | DATE | NAME | REVISIONS |
|---|---|---|---|
| 2 | FEB09/2021 | HCC | ISSUED FOR TENDER |
| 1 | OCT30/2020 | HCC | ISSUED FOR 90% REVIEW |

DURHAM REGION

THE REGIONAL MUNICIPALITY OF DURHAM
WORKS DEPARTMENT
DESIGN, CONSTRUCTION & ASSET MANAGEMENT

# RELOCATION OF DENTAL CLINIC TO 200 JOHN ST., OSHAWA

## COMMUNICATIONS DEMOLITION PLAN

| PROPERTY NO. | FACILITY CODE | FACILITIES PROJECT NO. |
|---|---|---|
| N/A | LEA-O-07 | LEA-O-07-19-01 |
| CONTRACT NO. | DRAWING NO. | SHEET NO. |
| T-1032-2021 | T-005 | 058 |

F:\Projects 2020\20104\T-005D.dwg

HENRY SCHEIN® DESIGN

# RELOCATION OF DENTAL CLINIC TO 200 JOHN ST., OSHAWA

## GENERAL NOTES

1. ROUGH-IN AND FINISH WORK FOR DENTAL EQUIPMENT IS TO BE ACCORDING TO TEMPLATES FURNISHED BY THE MANUFACTURERS OF EQUIPMENT BEING INSTALLED. DENTAL CONSULTANT WILL POSITION THE TEMPLATES IN THEIR PROPER LOCATIONS, AT WHICH TIME ALL SPECIFICATIONS ON THE PLANS WILL BE EXPLAINED TO THE GENERAL CONTRACTOR OR SUBCONTRACTOR(S). ALL SPECIFIED SIZES OF PIPES, TUBING, FITTINGS, ETC., AS WELL AS PROPER HEIGHTS MARKED, MUST BE STRICTLY FOLLOWED. ANY DEVIATIONS ON SIZES OR HEIGHTS OF PIPES, TUBING, AND/OR FITTINGS MUST BE CORRECTED BEFORE THE EQUIPMENT CAN BE INSTALLED, AND ANY SUCH EXTRA EXPENSE WILL BE THE RESPONSIBILITY OF GC AND/OR THE SUBTRADE.

2. FOR PROJECTS LOCATED IN THE PROVINCE OF ONTARIO THAT INVOLVE THE INSTALLATION, REMOVAL, OR RELOCATION OF ANY X-RAY MACHINE(S), MINISTRY OF HEALTH [MOH] APPROVAL MUST BE OBTAINED PRIOR TO THE COMMENCEMENT OF THE WORK. DENTAL CONSULTANT CAN FACILITATE THIS APPROVAL. SHIELDING, SWITCH AND MACHINE LOCATIONS MUST FOLLOW THE APPROVED PLAN.

3. SUCCESSFUL BIDDER OF EQUIPMENT TENDER T-1011-2021 WILL ASSEMBLE AND CONNECT TO UTILITIES WHICH ARE REQUIRED FOR OPERATION OF THE DENTAL OFFICE (SUCH AS ELECTRICAL, DOMESTIC WATER, SANITARY, GAS, AIR, AND VACUUM) PROVIDED SUCH CONNECTIONS BY OTHER TRADES ARE SUPPLIED CORRECTLY (WITH PROPER CONNECTIONS, FITTINGS, AND JUNCTIONS) AND COMPLETE, AS SPECIFIED BY DENTAL CONSULTANT. DENTAL CONSULTANT WILL CONNECT TO SUCH FITTINGS AND/OR JUNCTIONS PROVIDED OUR SERVICE TECHNICIANS ARE PERMITTED TO DO SO BY OTHER TRADES AND ARE NOT PROHIBITED FROM WORKING BY THEIR TRADE UNION AFFILIATION OR LACK OF TRADE UNION AFFILIATION. INSTALLATION PERMITS, IF REQUIRED, SHALL BE OBTAINED BY TRADES WHO PROVIDE THE SERVICE.

4. WHEN APPLICABLE, THE GC SHALL BE RESPONSIBLE FOR PROCURING A PLUMBING SUBCONTRACTOR THAT IS CERTIFIED AS A MEDICAL GAS INSTALLER TO INSTALL AN NFPA (NATIONAL FIRE PROTECTION AGENCY) CATEGORY 3 NITROUS OXIDE–OXYGEN CONSCIOUS SEDATION SYSTEMS AS DETAILED IN THESE PLANS. DENTAL CONSULTANT IS A NITROUS OXIDE SYSTEM END USER COMPONENT SUPPLIER AND DOES NOT MANUFACTURE OR DESIGN ANY OF THESE SYSTEMS. ANY SYSTEM DESIGN SHOWN ON THESE PLANS BY DENTAL CONSULTANT IS TO BE USED AS AN ILLUSTRATION ONLY FOR THE PURPOSE OF LOCATING END USER OUTLET STATIONS, CYLINDER ROOM MANIFOLD, AND ALARM PANEL. THE FINAL TRUNK SYSTEM INSTALLATION SHALL ADHERE TO THE MECHANICAL ENGINEERING DRAWINGS PREPARED BY OTHERS. THE SYSTEM, AS PER NFPA, IS TO BE VERIFIED FOR SAFETY BY A THIRD PARTY NOT INVOLVED IN THE SALE OR INSTALLATION OF ANY OF THE DEVICES ON THE SYSTEM, AND THE OFFICE SHOULD RECEIVE A CERTIFICATE OF VERIFICATION FROM THE THIRD PARTY VERIFIER.

5. PLUMBING SUBCONTRACTOR SHALL PROVIDE GAS CERTIFICATION CREDENTIALS IN ACCORDANCE WITH ANY REQUESTS BY THE OWNER, GENERAL CONTRACTOR, BUILDING DEPARTMENT, OR DENTAL CONSULTANT PRIOR TO COMMENCING WORK IF ANY TYPE OF NITROUS–OXIDE SYSTEM IS BEING INCORPORATED INTO THE PROJECT.

## 1. DENTAL CONSULTANT RESPONSIBILITIES

DENTAL CONSULTANT WILL ISSUE DETAIL DRAWINGS SHOWING CRITICAL LOCATIONS OF ALL DENTAL AND ALLIED EQUIPMENT. THE DENTAL CONSULTANT WILL BE AVAILABLE FOR PERIODIC FIELD VISITS. VISITS WILL BE LIMITED TO A PRE-CONSTRUCTION ON-SITE MEETING, LAYOUT CHECKS AND INSTRUCTIONS TO THE VARIOUS TRADES IN THE CRITICAL ASPECTS OF THE WORK PERTAINING TO DENTAL AND ALLIED EQUIPMENT. ALL REQUESTS FOR FIELD VISITS SHALL ALLOW REASONABLE ADVANCED NOTICE. THE DENTAL CONSULTANT AND ITS REPRESENTATIVES WILL NOT ASSUME ANY RESPONSIBILITIES FOR DEVIATIONS FROM DETAIL DRAWINGS AND SPECIFICATIONS WITHOUT PRIOR WRITTEN ENDORSEMENT.

PRIOR TO CONSTRUCTION, DENTAL CONSULTANT WILL VERIFY THE SITE DIMENSIONS OF THE SPACE PRIOR TO ENSURE THEY COINCIDE WITH THE DESIGN DRAWINGS. DURING CONSTRUCTION, THE DENTAL CONSULTANT WILL CHECK THE JOBSITE PERIODICALLY AS REQUIRED. THE DENTAL CONSULTANT WILL BE AVAILABLE TO ASSIST THE CONTRACTOR(S)AND THE OWNER IN THE INTERPRETATION OF THESE DRAWINGS AND SPECIFICATIONS. PRIOR TO ENCLOSING WALLS, THE GENERAL CONTRACTOR AND/OR THE FRAMING SUBCONTRACTOR IS REQUIRED TO COORDINATE WITH THE DENTAL CONSULTANT AND THE DENTAL CONSULTANT INSTALLATION TECHNICIAN. THIS INSPECTION IS CRITICAL TO ENSURE THAT THE ANY WALL OR CEILING SUPPORTS WILL MATCH WITH ANY CHANGES THAT MAY HAVE OCCURRED WITH THE OWNER'S EQUIPMENT ORDER. IT IS THE RESPONSIBILITY OF THE GENERAL CONTRACTOR TO HAVE PLUMBING, ELECTRICAL, SUPPORT BACKING, AND LEAD INSTALLATION APPROVED BY MUNICIPAL INSPECTORS BEFORE POURING SLABS, ENCLOSING PARTITIONS AND CEILING.

EQUIPMENT INSTALLATION:
A PRE-CONSTRUCTION MEETING IS REQUIRED WITH THE GENERAL CONTRACTOR, PLUMBER, ELECTRICIAN, CABINET MAKER, AND THE DENTAL CONSULTANT . ALL TEMPLATES CRITICAL TO EQUIPMENT INSTALLATION WILL BE DISTRIBUTED AT THIS MEETING.

THE DENTAL CONSULTANT WILL INSPECT PREMISES PRIOR TO THE INSTALLATION OF ITS EQUIPMENT AT WHICH TIME ALL FINISHES (CEILINGS, FLOORING, AND PAINTING) AND MECHANICAL WORK MUST BE COMPLETED. RESPONSIBILITIES FOR THE INSTALLATION AND/OR HOOKUP OF DENTAL EQUIPMENT WILL BE DEFINED IN THE SPECIFICATIONS FOR EACH TRADE. DENTAL CONSULTANT REQUIRES THAT ALL APPLICABLE TRADES BE REPRESENTED AT THE TIME OF INSTALLATION.

## 1. DEFINITIONS

SUCCESSFUL BIDDER OF EQUIPMENT TENDER T-011-2021- IS A DENTAL CONSULTANT THAT SPECIALIZES IN THE MANAGEMENT OF EQUIPMENT AND INSTALLATIONS AND CAN ASSIST THE OWNER IN THE PREPARATION OF DRAWINGS AND SPECIFICATIONS FOR THE CONSTRUCTION OF THE PROPOSED FACILITY ONCE TENDERED.

## DRAWING LIST

| | DRAWING NO. | SHEET NO. | |
|---|---|---|---|
| ARCHITECTURAL | A0 | 059 | COVER SHEET & GENERAL NOTES |
| | A1 | 060 | DENTAL EQUIPMENT PLAN |
| | A2 | 061 | SUPPORTS PLAN |
| | A3 | 062 | X-RAY PLAN |
| | A3.1 | 063 | X-RAY DETAILS |
| PLUMBING | P1 | 064 | DENTAL PLUMBING AIR COMPRESSOR & VACUUM LINES |
| | P2 | 065 | DENTAL PLUMBING WATER & DRAIN LINES |
| | P3 | 066 | DENTAL PLUMBING MEDICAL GASES |
| DETAILS | D1 | 067 | DENTAL ELECTRICAL & PLUMBING DETAILS |
| | D2 | 068 | DENTAL ELECTRICAL & PLUMBING DETAILS |

ABBREVIATIONS:

| | |
|---|---|
| A | AMPERES / AMPS |
| ACT | ACOUSTICAL CEILING TILE |
| AFF | ABOVE FINISHED FLOOR |
| AMP | AMPERES |
| A/V | AUDIO/VISUAL |
| BF | BARRIER-FREE |
| BFPOT | BARREIR-FREE PATH OF TRAVEL |
| CA | COMPRESSED AIR |
| C/L | CENTRELINE |
| CL | CLOSET |
| CFM | CUBIC FEET PER MINUTE |
| COL | COLUMN |
| COMP | COMPRESSOR |
| CYL | CYLINDER |
| DIA | DIAMETER |
| D/W | DISHWASHER |
| EJ | EXPANSION JOINT |
| EP | ELECTRICAL PANEL |
| ESS | EQUIPMENT SALES SPECIALIST |
| EX | EXISTING |
| FA | FIRE ALARM |
| FD | FLOOR DRAIN |
| FE | FIRE EXTINGUISHER |
| FHC | FIRE HOSE CABINET |
| FIN | FINISH |
| FR | FRIDGE / REFRIGERATOR |
| FSC | FIELD SALES CONSULTANT |
| GA | GAUGE |
| GC | GENERAL CONTRACTOR |
| GFCI | GROUND FAULT CIRCUIT INTERRUPT |
| GL | GLASS |
| GWB | GYPSUM WALL BOARD |
| H2O | WATER |
| HSCI | HENRY SCHEIN CANADA INC. |
| HSD | HENRY SCHEIN DESIGN |
| HM | HOLLOW METAL |
| HVAC | HEATING, VENTILATION, & AIR CONDITIONING |
| HYG | HYGIENE |
| IT | INFORMATION TECHNOLOGY |
| JAN | JANITOR |
| LAB | LABRATORY |
| LED | LIGHT EMITTING DIODE |
| m | METRE |
| MAX | MAXIMUM |
| MIN | MINIMUM |
| MISC | MISCELLANEOUS |
| mm | MILLIMETRES |
| MOH | MINISTRY OF HEALTH |
| MTL | METAL |
| MW | MICROWAVE OVEN |
| N | NORTH |
| N2 | NITROGEN |
| N2O | NITROUS OXIDE |
| NIC | NOT IN CONTRACT |
| NTS | NOT TO SCALE |
| O2 | OXYGEN |
| OBC | ONTARIO BUILDING CODE |
| OC | ON CENTRE |
| OD | OUTSIDE DIAMETER |
| OP | OPERATORY |
| PA | PUBLIC ADDRESS |
| PDC | POWER DOOR CONTROLS |
| PDO | POWER DOOR OPERATOR |
| RO | ROUGH OPENING |
| SS | STAINLESS STEEL |
| TBC | TO BE CONFIRMED |
| TBD | TO BE DETERMINED |
| U/C | UNDER CABINET |
| U/S | UNDERSIDE |
| V | VOLTS |
| VAC | VACUUM |
| W | WATTS |
| W/ | WITH |
| W/C | WATER CLOSET |
| W/O | WITHOUT |
| XRIS | X-RAY INSPECTION SERVICES |

HENRY SCHEIN® DESIGN
221 JACOB KEFFER PARKWAY
CONCORD, ON L4K 5T9
1-800-668-5558

RELOCATION OF DENTAL CLINIC TO 200 JOHN ST., OSHAWA
DURHAM REGION
200 JOHN STREET WEST, OSHAWA, ON L1J 2B4

- IMPORTANT NOTE -
THE IDEAS EXPRESSED HEREIN ARE THE SOLE PROPERTY OF HENRY SCHEIN CANADA, AND MAY NOT BE USED OR REPRODUCED WITHOUT EXPRESSED WRITTEN CONSENT AND FULL PAYMENT OF ANY ASSOCIATED DESIGN FEES. DO NOT SCALE DRAWINGS. ALL DIMENSIONS MUST BE CHECKED AND SITE VERIFIED BY THE GENERAL CONTRACTOR; REPORT ALL ERRORS AND/OR OMISSIONS.

HENRY SCHEIN FSC:
NEIL McTAVISH
416-543-9419
HENRY SCHEIN ESS:
MARK GRANT
416-434-2932
BRANCH: TORONTO

PROJECT START DATE: 2020-10-16
DRAWN BY: BS
USABLE SQ.FT.= -
MOH REG #

REVISIONS:

| | | |
|---|---|---|
| 1 | 2020-12-03 | BS |
| 2 | 2021-01-11 | BS |
| 3 | 2021-01-28 | BS |
| 4 | 2021-02-10 | BS |
| 5 | 2021-03-02 | BS |
| 6 | 2021-03-10 | BS |
| 7 | 2021-03-25 | BS |

PROJECT NORTH:

SCALE: N/A
PROJ No.: **20-053**

**COVER SHEET & GENERAL NOTES**

**A0**

© 2020 by HENRY SCHEIN CANADA, INC. | HSD INC.

P:\ARCHIVE 2020\DURHAM HEALTH-20-053\4-FINALS\DURHAM HEALTH-20-053-F-R7.DWG --- 2021-03-25 5:37:30 AM

NOTES :

EQUIPMENT SUPPLIED AND INSTALLED BY OTHERS - REFERENCE EQUIPMENT TENDER (T-1011-2021)

I.T / ELECTRICAL
CCTV
DENTURIST LAB
LOCKERS
FD
W
D
KITCHEN
MEETING ROOM
CUSTODIAL
FD
HWT
MEN'S WASHROOM
CORRIDOR
WOMEN'S WASHROOM
PHONE ROOM 2
PHONE ROOM 1
COMPRESSOR ROOM
OP.5
OP.4
OP.3
OP.2
CORRIDOR
OFFICE 3
OP.6
OP.7
STERILIZATION
OP.1
CUBICLES/WORKSTATIONS
CORRIDOR
ADMINISTRATION
PANORAMIC ROOM
FILE ROOM
OFFICE 2
RECEPTION
COPY AREA
CONSULT ROOM 1
1
10
20
27
28
34

**OP.2, OP.3, OP.4, OP.5** - EXISTING - RELOCATION

| | |
|---|---|
| DENTAL CHAIR: | BELMONT X-CALIBURV WITH CUSPIDOR |
| DENTAL LIGHT: | BELMONT HALOGEN LIGHT CHAIR MOUNT |
| DELIVERY: | OTP |
| REAR CONSOLE: | CUSTOM CABINETRY |
| CPU: | TBD |
| MONITOR LOCATION(S): | CHAIR MOUNT |
| INTRAORAL X-RAY: | SIRONA HELIODENT PLUS |

*EQUIPMENT: OR APPROVED EQUIVALENT/EQUAL*

MEDICAL GAS CLOSET:

| | |
|---|---|
| GAS MANIFOLD-1: | MAKE/MODEL TBD (O2/N2O) |
| GAS MANIFOLD-2: | MAKE/MODEL TBD (NITROUS) |
| ZONE VALVE MASTER: | MAKE/MODEL TBD |
| GAS ALARM MASTER: | TBD LOCATION IN STERILIZATION |

*EQUIPMENT: OR APPROVED EQUIVALENT/EQUAL*

UTILITY: EXISTING & NEW EQUIPMENT

| | |
|---|---|
| VACUUM: | AIR TECHNIQUES STS-5 -EXISTING<br>BUCK-BOOST TRANSFORMER<br>AIR TECHNIQUES MOJAVE V3<br>BUCK-BOOST TRANSFORMER X2 |
| COMPRESSOR: | AIR TECHNIQUES AIRSTAR-30 -EXISTING<br>AIR TECHNIQUES AIRSTAR-50 AS50<br>BUCK-BOOST TRANSFORMER X2 |
| WATER SHUT-OFF: | MAKE/MODEL TBD |
| AMALGAM SEPARATOR: | SOLMETEX NXT HG5 - EXISTING |
| BACKFLOW PREVENTION: | AIR TECHNIQUES<br>WATER BYPASS SOLENOID<br>LOCATION TO BE CONFIRM BY ESS |
| MASTER SWITCH: | CP4 MASTER SWITCH |

*EQUIPMENT: OR APPROVED EQUIVALENT/EQUAL*

STERILIZATION: EXISTING - RELOCATION

| | |
|---|---|
| CABINETRY: | CUSTOM CABINETRY |
| AUTOCLAVE (HANDPIECE): | MIDMARK M9 X 2 |
| AUTOCLAVE CHAMBER: | MIDMARK M11 & PELTON&CRANE DELTAQ |
| INSTRUMENT WASHER: | MIELE PROFESSIONAL G 7881 |
| ULTRASONIC CLEANER: | BIOSONIC ULTRASONIC CLEANER |
| EYEWASH: | BRADLEY EYEWASH STATION |

*EQUIPMENT: OR APPROVED EQUIVALENT/EQUAL*

**OP.1, OP.6, OP.7** - NEW EQUIPMENT

| | |
|---|---|
| DENTAL CHAIR: | BELMONT QUOLIS WITH CUSPIDOR |
| DENTAL LIGHT: | BELMONT HALO LED CHAIR MOUNT |
| DELIVERY: | OTP |
| REAR CONSOLE: | CUSTOM CABINETRY |
| CPU: | TBD |
| MONITOR LOCATION(S): | CHAIR MOUNT |
| INTRAORAL X-RAY: | SIRONA HELIODENT PLUS |

*EQUIPMENT: OR APPROVED EQUIVALENT/EQUAL*

PAN/CEPH:

| | |
|---|---|
| EXTRAORAL X-RAY: | SOREDEX CRANEX NOVUS 2011 - EXISTING |
| PAN CPU: | LOCATION |
| IMAGING MEDIA: | SCAN-X, OUTSIDE ROOM |

*EQUIPMENT: OR APPROVED EQUIVALENT/EQUAL*

HENRY SCHEIN® DESIGN
221 JACOB KEFFER PARKWAY
CONCORD, ON L4K 5T9
1-800-668-5558

# RELOCATION OF DENTAL CLINIC TO 200 JOHN ST., OSHAWA

DURHAM REGION

200 JOHN STREET WEST, OSHAWA, ON L1J 2B4

**- IMPORTANT NOTE -**
THE IDEAS EXPRESSED HEREIN ARE THE SOLE PROPERTY OF HENRY SCHEIN CANADA, AND MAY NOT BE USED OR REPRODUCED WITHOUT EXPRESSED WRITTEN CONSENT AND FULL PAYMENT OF ANY ASSOCIATED DESIGN FEES. DO NOT SCALE DRAWINGS; ALL DIMENSIONS MUST BE CHECKED AND SITE VERIFIED BY THE GENERAL CONTRACTOR; REPORT ALL ERRORS AND/OR OMISSIONS.

HENRY SCHEIN FSC:
NEIL McTAVISH
416-543-9419
HENRY SCHEIN ESS:
MARK GRANT
416-434-2932
BRANCH: TORONTO

PROJECT START DATE: 2020-10-16
DRAWN BY: BS
USABLE SQ.FT.= -

MOH REG #

REVISIONS:

| | | |
|---|---|---|
| 1 | 2020-12-03 | BS |
| 2 | 2021-01-11 | BS |
| 3 | 2021-01-28 | BS |
| 4 | 2021-02-10 | BS |
| 5 | 2021-03-02 | BS |
| 6 | 2021-03-10 | BS |
| 7 | 2021-03-25 | BS |

PROJECT NORTH:

SCALE: 1/4" = 1'-0"
PROJ No.: **20-053**

**DENTAL EQUIPMENT PLAN**

**A1**

P:\ARCHIVE 2020\DURHAM HEALTH-20-053\V4-FINALS\DURHAM HEALTH-20-053-F-R7.DWG - - - 2021-03-25 5:37:32 AM

© 2020 by HENRY SCHEIN CANADA, INC. | HSD INC.

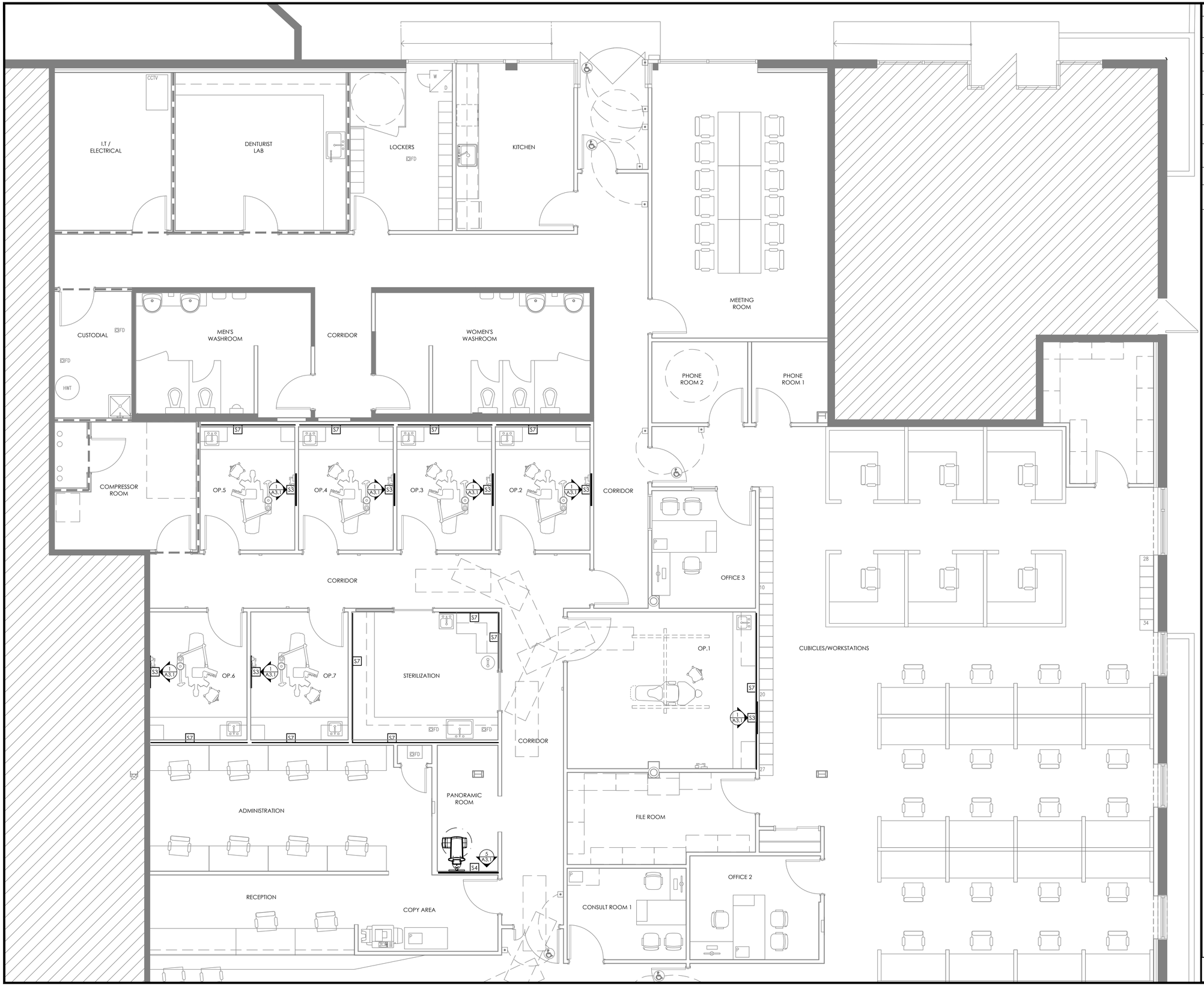


## SUPPORT LEGEND

| SYMBOL | DESCRIPTION | DETAIL |
|---|---|---|
| S1 | RESEREVED | |
| S2 | RESERVED | |
| S3 | INTRAORAL X-RAY HEAD, ARM, AND WALL BRACKET - SUPPLIED BY SUCCESSFUL BIDDER. REQUIRES A MECHANICAL GROUND. CONTRACTOR TO PROVIDE 2 LAYERS OF ¾" PLYWOOD BLOCKING, SUPPLIED BY OTHERS. | 1 / A3.1 |
| S4 | PANORAMIC X-RAY- REQUIRES A MECHANICAL GROUND, CONTRACTOR TO PROVIDE 2 LAYERS OF ¾" PLYWOOD BLOCKING. | 5 / A3.1 |
| S5 | RESERVED | N/A |
| S6 | RESERVED | N/A |
| S7 | CONTRACTOR TO PROVIDE ¾" PLYWOOD BLOCKING AS REQUIRED. SUPPLIED BY OTHERS. | N/A |

HENRY SCHEIN® DESIGN
221 JACOB KEFFER PARKWAY
CONCORD, ON L4K 5T9
1-800-668-5558

# RELOCATION OF DENTAL CLINIC TO 200 JOHN ST., OSHAWA

DURHAM REGION

200 JOHN STREET WEST, OSHAWA, ON L1J 2B4

- IMPORTANT NOTE -
THE IDEAS EXPRESSED HEREIN ARE THE SOLE PROPERTY OF HENRY SCHEIN CANADA, AND MAY NOT BE USED OR REPRODUCED WITHOUT EXPRESSED WRITTEN CONSENT AND FULL PAYMENT OF ANY ASSOCIATED DESIGN FEES. DO NOT SCALE DRAWINGS. ALL DIMENSIONS MUST BE CHECKED AND SITE VERIFIED BY THE GENERAL CONTRACTOR; REPORT ALL ERRORS AND/OR OMISSIONS.

HENRY SCHEIN FSC:
NEIL McTAVISH
416-543-9419
HENRY SCHEIN ESS:
MARK GRANT
416-434-2932
BRANCH: TORONTO

PROJECT START DATE: 2020-10-16
DRAWN BY: BS
USABLE SQ.FT.= -

MOH REG #

REVISIONS:

| | | |
|---|---|---|
| 1 | 2020-12-03 | BS |
| 2 | 2021-01-11 | BS |
| 3 | 2021-01-28 | BS |
| 4 | 2021-02-10 | BS |
| 5 | 2021-03-02 | BS |
| 6 | 2021-03-10 | BS |
| 7 | 2021-03-25 | BS |

PROJECT NORTH:

SCALE: 1/4" = 1'-0"
PROJ No.: **20-053**

**SUPPORTS PLAN**

**A2**

P:\ARCHIVE 2020\DURHAM HEALTH-20-053\4-FINALS\DURHAM HEALTH-20-053-F-R7.DWG --- 2021-03-25 5:37:34 AM

© 2020 by HENRY SCHEIN CANADA, INC. | HSD INC.

NOTES :

USE MANUFACTURERS SPECIFICATIONS AND TEMPLATES FOR ALL EQUIPMENT.

SALES REPRESENTATIVE TO SUPERVISE PROJECT.

THIS PLAN IS NOT CONSIDERED APPROVED UNLESS REGISTERED AND SIGNED OFF BY THE MINISTRY OF HEALTH. APPROVED PLANS TO BE RETAINED BY DENTAL OFFICE.

- 0.8 mm (1/32") MEDICAL GRADE LEAD FROM 0.5 m (19 1/2") ABOVE FINISHED FLOOR TO 2.0 m (79") ABOVE FINISHED FLOOR MINIMUM.

- 1.6 mm (1/16") MEDICAL GRADE LEAD, OR TWO LAYERS 0.8 mm, FROM 0.5 m (19 1/2") ABOVE FINISHED FLOOR TO 2.0 m (79") ABOVE FINISHED FLOOR MINIMUM.

LEGEND

| | |
|---|---|
| (H) | PATIENT'S HEAD |
| $x | X-RAY FIXED SWITCH [EXPOSURE BUTTON] |
| XRH | X-RAY HEAD ON ARTICULATING ARM |
| # | NO OCCUPANCY PERMITTED IN THIS AREA DURING X-RAY EXPOSURE. X-RAY OPERATOR TO HAVE PROCEDURAL CONTROL |
| | ELECTRICAL WIRING (DIAGRAMMATIC) |

NOTICE

THIS PLAN SHALL BE SUBMITTED TO THE MINISTRY OF HEALTH X-RAY INSPECTION SERVICE (XRIS) FOR EVALUATION AND APPROVAL.

AS PER THE HEALING ARTS RADIATION PROTECTION ACT, R.S.O.1990, C.H.2, SECTION 3.(1) NO PERSON SHALL INSTALL AN X-RAY MACHINE UNLESS THE DIRECTOR HAS ISSUED WRITTEN APPROVAL FOR INSTALLATION.

APPROVED PLAN AND LETTER FROM THE DIRECTOR OF X-RAY SAFTEY WILL BE SENT TO CLIENT ONCE APPROVAL HAS BEEN GRANTED.

APPROVED PLAN IS TO BE FOLLOWED FOR THE INSTALLATION OF THE X-RAY SWITCHES, LEAD SHIELDING, OPENINGS/DOORS OR OCCUPANCY CONTROL DEVICES.

HENRY SCHEIN® DESIGN
221 JACOB KEFFER PARKWAY
CONCORD, ON L4K 5T9
1-800-668-5558

# RELOCATION OF DENTAL CLINIC TO 200 JOHN ST., OSHAWA

DURHAM REGION

200 JOHN STREET WEST, OSHAWA, ON L1J 2B4

- IMPORTANT NOTE -
THE IDEAS EXPRESSED HEREIN ARE THE SOLE PROPERTY OF HENRY SCHEIN CANADA, AND MAY NOT BE USED OR REPRODUCED WITHOUT EXPRESSED WRITTEN CONSENT AND FULL PAYMENT OF ANY ASSOCIATED DESIGN FEES. DO NOT SCALE DRAWINGS. ALL DIMENSIONS MUST BE CHECKED AND SITE VERIFIED BY THE GENERAL CONTRACTOR; REPORT ALL ERRORS AND/OR OMISSIONS.

HENRY SCHEIN FSC:
NEIL McTAVISH
416-543-9419
HENRY SCHEIN ESS:
MARK GRANT
416-434-2932
BRANCH: TORONTO

PROJECT START DATE: 2020-10-16
DRAWN BY: BS
USABLE SQ.FT.= -
MOH REG #

REVISIONS:

| | | |
|---|---|---|
| 1 | 2020-12-03 | BS |
| 2 | 2021-01-11 | BS |
| 3 | 2021-01-28 | BS |
| 4 | 2021-02-10 | BS |
| 5 | 2021-03-02 | BS |
| 6 | 2021-03-10 | BS |
| 7 | 2021-03-25 | BS |

PROJECT NORTH:

SCALE: 1/4" = 1'-0"
PROJ No.: **20-053**

**X-RAY PLAN**

**A3**

P:\ARCHIVE 2020\DURHAM HEALTH-20-053\4-FINALS\DURHAM HEALTH-20-053-F-R7.DWG --- 2021-03-25 5:37:37 AM

© 2020 by HENRY SCHEIN CANADA, INC. | HSD INC.

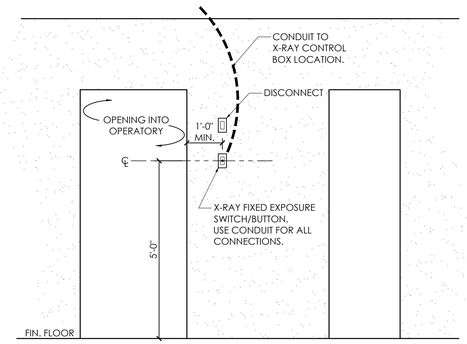


NOTE: HEIGHT OF EXPOSURE SWITCH IS EXEMPT FROM THE REQUIREMENTS OF THE ONTARIO BUILDING CODE, ARTICLE 3.8.1.5. "CONTROLS", STATING THAT THE SWITCH IS TO BE MOUNTED AT 1200 mm (3'-11 1/4"). THIS X-RAY EXPOSURE SWITCH IS NOT CLASSIFIED AS: SAFETY DEVICE, ELECTRICAL SWITCH, THERMOSTAT, OR INTERCOM. SPECIAL TRAINING IS REQUIRED TO USE THIS EXPOSURE SWITCH AND THUS IS NOT FOR GENERAL USE. IT IS ALSO TO BE LOCATED OUT OF THE REACH OF SMALL CHILDREN.

## 7 TYP. REMOTE EXPOSURE SWITCH DETAIL

SCALE: 1/2" = 1'-0"

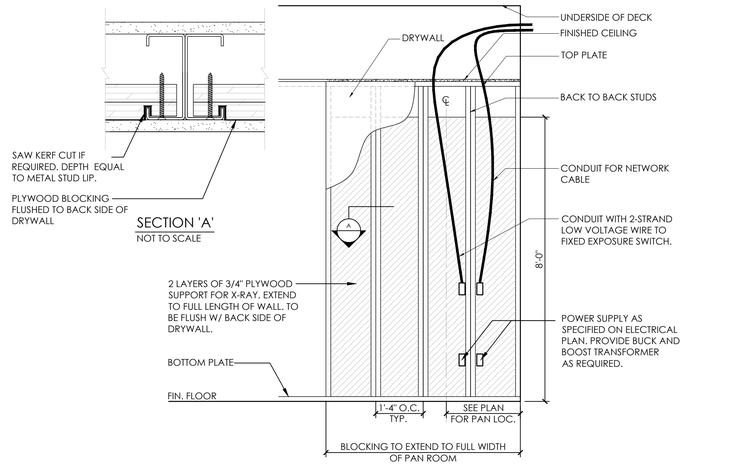


## 5 TYP. PAN X-RAY SUPPORT - SECTION ELEV.

SCALE: 1/2" = 1'-0"

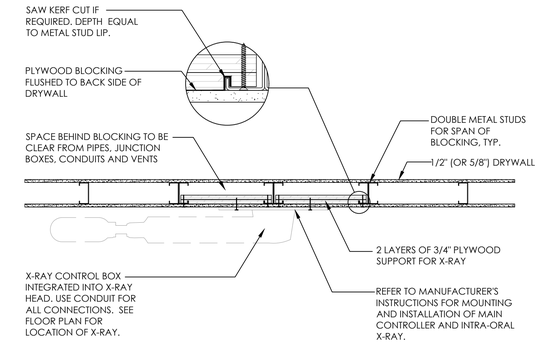


## 4 TYP. INTRA-ORAL X-RAY SUPPORT - PLAN

NOT TO SCALE

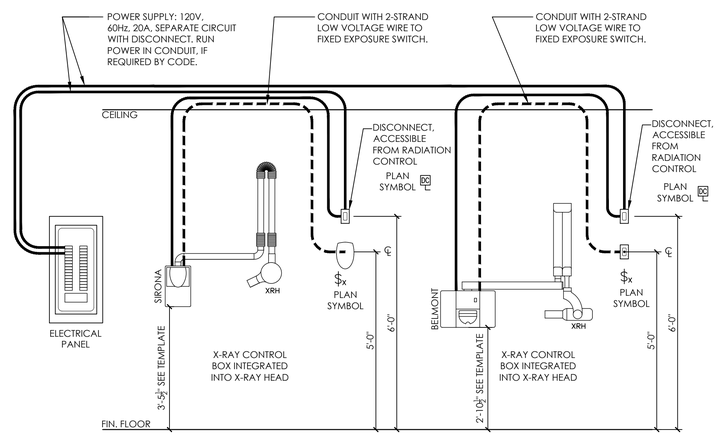


## 2 SCHEMATIC WIRING DIAGRAM - INTRA-ORAL's

SCALE: 1/2" = 1'-0"

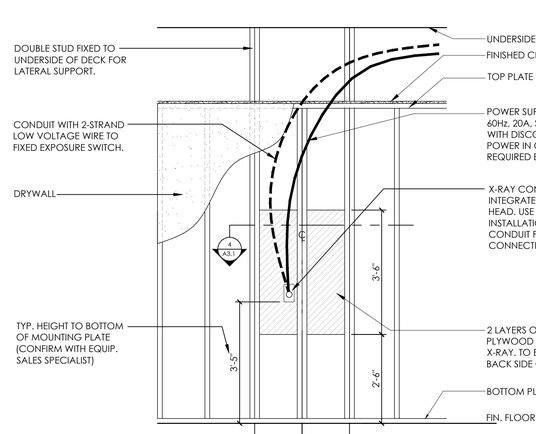


## 1 TYP. INTRA-ORAL X-RAY SUPPORT - SECTION ELEV.

SCALE: 1/2" = 1'-0"

HENRY SCHEIN® DESIGN
221 JACOB KEFFER PARKWAY
CONCORD, ON L4K 5T9
1-800-668-5558

**RELOCATION OF DENTAL CLINIC TO 200 JOHN ST., OSHAWA**

DURHAM REGION

200 JOHN STREET WEST, OSHAWA, ON L1J 2B4

- IMPORTANT NOTE -
THE IDEAS EXPRESSED HEREIN ARE THE SOLE PROPERTY OF HENRY SCHEIN CANADA, AND MAY NOT BE USED OR REPRODUCED WITHOUT EXPRESSED WRITTEN CONSENT AND FULL PAYMENT OF ANY ASSOCIATED DESIGN FEES. DO NOT SCALE DRAWINGS. ALL DIMENSIONS MUST BE CHECKED AND SITE VERIFIED BY THE GENERAL CONTRACTOR; REPORT ALL ERRORS AND/OR OMISSIONS.

HENRY SCHEIN FSC:
NEIL McTAVISH
416-543-9419
HENRY SCHEIN ESS:
MARK GRANT
416-434-2932
BRANCH: TORONTO

PROJECT START DATE: 2020-10-16
DRAWN BY: BS
USABLE SQ.FT.= -

MOH REG #

REVISIONS:

| | | |
|---|---|---|
| 1 | 2020-12-03 | BS |
| 2 | 2021-01-11 | BS |
| 3 | 2021-01-28 | BS |
| 4 | 2021-02-10 | BS |
| 5 | 2021-03-02 | BS |
| 6 | 2021-03-10 | BS |
| 7 | 2021-03-25 | BS |

PROJECT NORTH:

SCALE: 1/4" = 1'-0" | PROJ No.: **20-053**

**X-RAY DETAILS**

# A3.1

© 2020 by HENRY SCHEIN CANADA, INC. | HSD INC.

P:\ARCHIVE 2020\DURHAM HEALTH-20-053\4-FINALS\DURHAM HEALTH-20-053-F-R7.DWG - - - 2021-03-25 5:37:39 AM

## BRANCH LINE CONFIGURATIONS




DETAIL A
(USE FOR ALL SUBFLOOR INTERSECTIONS)

DO NOT PIPE TRUNK LINE IN A SERIES MANNER LOOPING FROM J-BOX TO J-BOX. A CONTINUOUS TRUNK LINE MUST BE MAINTAINED FROM THE PUMP TO THE FURTHEST J-BOX USING BRANCH LINES OFF OF THE TRUNK LINE TO PICK UP EACH J-BOX OUTLET. TRUNK LINE MAY FOLLOW DRAIN LINE TRENCHES WITHIN REASON, USE ONLY 45 DEGREE EL'S. DO NOT USE ANY 90 EL'S. ALL SUB FLOOR SCH 40 PVC CONNECTIONS ARE TO BE PLUMBED WITH 45 EL'S USING DETAIL A FOR TEEING BRANCH LINE CONNECTIONS INTO TRUNK LINE.

SPECIAL NOTE:
IF VACUUM LINES ENCROACH ON EITHER A WALL OR COLUMN FOOTING, USE 45 DEGREE ELBOWS TO PIPE AROUND FOOTING SO PIPE REACHES PROPER LOCATION.

## PLUMBING LEGEND

| | |
|---|---|
| A | ½" HOT AND ¾" COLD WATER WITH 1½" TRAP AND VENTED WASTE LINE TO SINK. |
| B | RESERVED |
| C | RESERVED |
| D | ¾" COLD WATER, ½" AIR, 1 ½" VACUUM LINE. TERMINATE WITH ½" AND 1 ¼" WET VENTED WASTE RISERS. ALL UTILITIES THROUGH FLOOR TO MOUNTED DENTAL UTILITY CENTER. PLUMBER TO INSTALL BACKFLOW PREVENTION VALVES BEFORE MANUAL SHUT OFF IF DENTAL UNIT IS NOT OUTFITTED WITH SELF CONTAINED CLEAN WATER SYSTEM. |
| E | RESERVED |
| F | RESERVED |
| G | RESERVED |
| H | ½" HOT AND COLD WATER<br>½" HOSE BIBB FOR HYDRIM<br>¾" DRAIN BARB |
| I | RESERVED |
| J | DENTAL VACUUM PUMP (SUPPLIED). TERMINATE VACUUM LINE. PROVIDE ¾" COLD WATER TO ½" BRASS GATE VALVE. EXHAUST TO 2" TRAP AND VENTED DRAIN. |
| K | DENTAL AIR COMPRESSOR (SUPPLIED). TERMINATE ½" COPPER AIR LINE AT COMPRESSOR UNIT. |
| L | PLASTER TRAP TO BE INSTALLED BY PLUMBER |
| M | AMALGAM SEPARATOR. |
| N | ¾" MAIN INCOMING COLD WATER WITH BACKFLOW PREVENTION VALVE. PRESSURE VACUUM BREAKER TO ¾" SHUTOFF ELECTRIC SOLENOID AND WATER FILTER AVAILABLE FROM HENRY SCHEIN CANADA INC. TO BE INSTALLED BY PLUMBER. LOCATION TO BE DETERMINED BY PLUMBER ON SITE. |
| A | AIR COMPRESSOR OUTLET |
| V | VACUUM OUTLET |
| A — A | ½" ID TYPE 'L' COPPER, COMPRESSED AIR LINE |
| V — V | 1 ½" IPS, PVC, SCH. 40 VACUUM LINE, SLOPE 1" PER 20' TOWARD PUMP, USE 45° BENDS. |

NOTE: NOT ALL SYMBOLS MAY APPLY TO THIS PROJECT. CONTRACTOR TO REFER TO CEILING & FLOOR PLANS.


HENRY SCHEIN DESIGN
221 JACOB KEFFER PARKWAY
CONCORD, ON L4K 5T9
1-800-668-5558


# RELOCATION OF DENTAL CLINIC TO 200 JOHN ST., OSHAWA

DURHAM REGION

200 JOHN STREET WEST, OSHAWA, ON L1J 2B4


- IMPORTANT NOTE -
THE IDEAS EXPRESSED HEREIN ARE THE SOLE PROPERTY OF HENRY SCHEIN CANADA, AND MAY NOT BE USED OR REPRODUCED WITHOUT EXPRESSED WRITTEN CONSENT AND FULL PAYMENT OF ANY ASSOCIATED DESIGN FEES. DO NOT SCALE DRAWINGS. ALL DIMENSIONS MUST BE CHECKED AND SITE VERIFIED BY THE GENERAL CONTRACTOR; REPORT ALL ERRORS AND/OR OMISSIONS.



HENRY SCHEIN FSC:
NEIL McTAVISH
416-543-9419
HENRY SCHEIN ESS:
MARK GRANT
416-434-2932
BRANCH: TORONTO


PROJECT START DATE: 2020-10-16
DRAWN BY: BS
USABLE SQ.FT.= -

MOH REG #

REVISIONS:

| | | |
|---|---|---|
| 1 | 2020-12-03 | BS |
| 2 | 2021-01-11 | BS |
| 3 | 2021-01-28 | BS |
| 4 | 2021-02-10 | BS |
| 5 | 2021-03-02 | BS |
| 6 | 2021-03-10 | BS |
| 7 | 2021-03-25 | BS |

PROJECT NORTH:

SCALE: 1/4" = 1'-0"
PROJ No.: **20-053**

**DENTAL PLUMBING AIR COMPRESSOR & VACUUM LINES**

# P1


© 2020 by HENRY SCHEIN CANADA, INC. | HSD INC.


P:\ARCHIVE 2020\DURHAM HEALTH-20-053\V4-FINALS\DURHAM HEALTH-20-053-F-R7.DWG - - - 2021-03-25 5:37:41 AM

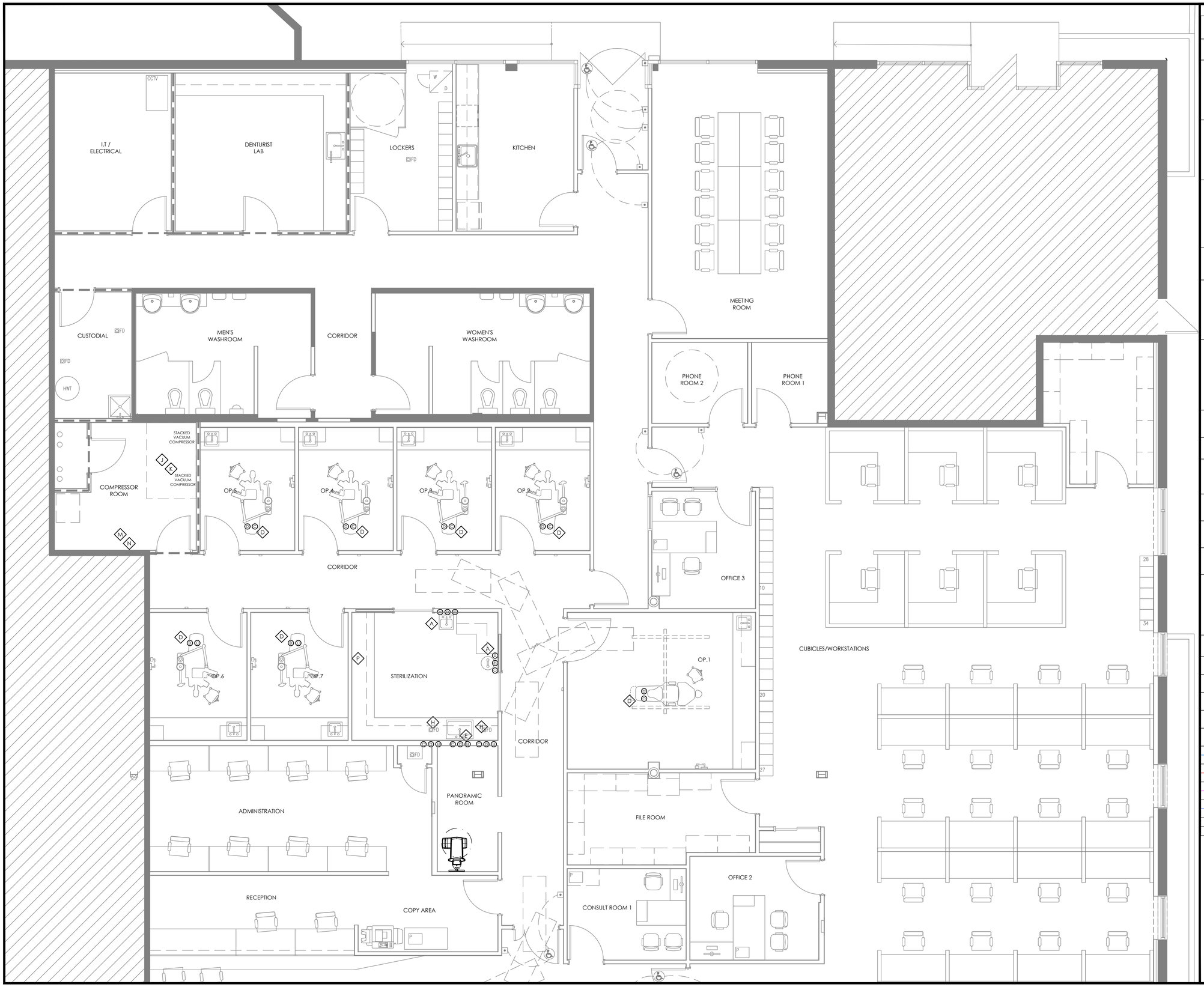


## PLUMBING LEGEND

| | |
|---|---|
| A | ½" HOT AND ¾" COLD WATER WITH 1½" TRAP AND VENTED WASTE LINE TO SINK. |
| B | RESERVED |
| C | RESERVED |
| D | ¾" COLD WATER, ½" AIR, 1 ½" VACUUM LINE. TERMINATE WITH ½" AND 1 ¼" WET VENTED WASTE RISERS. ALL UTILITIES THROUGH FLOOR TO MOUNTED DENTAL UTILITY CENTER. PLUMBER TO INSTALL BACKFLOW PREVENTION VALVES BEFORE MANUAL SHUT OFF IF DENTAL UNIT IS NOT OUTFITTED WITH SELF CONTAINED CLEAN WATER SYSTEM. |
| E | RESERVED |
| F | RESERVED |
| G | RESERVED |
| H | ½" HOT AND COLD WATER<br>½" HOSE BIBB FOR HYDRIM<br>¾" DRAIN BARB |
| I | RESERVED |
| J | DENTAL VACUUM PUMP (SUPPLIED). TERMINATE VACUUM LINE. PROVIDE ¾" COLD WATER TO ½" BRASS GATE VALVE. EXHAUST TO 2" TRAP AND VENTED DRAIN. |
| K | DENTAL AIR COMPRESSOR (SUPPLIED). TERMINATE ½" COPPER AIR LINE AT COMPRESSOR UNIT. |
| L | PLASTER TRAP TO BE INSTALLED BY PLUMBER |
| M | AMALGAM SEPARATOR. |
| N | ¾" MAIN INCOMING COLD WATER WITH BACKFLOW PREVENTION VALVE. PRESSURE VACUUM BREAKER TO ¾" SHUTOFF ELECTRIC SOLENOID AND WATER FILTER AVAILABLE FROM HENRY SCHEIN CANADA INC. TO BE INSTALLED BY PLUMBER. LOCATION TO BE DETERMINED BY PLUMBER ON SITE. |
| P | VISTAPURE WATER FILTRATION SYSTEM |
| H | HOT WATER TERMINATION VALVE |
| C | COLD WATER TERMINATION VALVE |
| D | SANITARY DRAIN |
| R | RESERVED |
| | RESERVED |
| CW — CW | RESERVED |
| HW — HW | RESERVED |
| D — D | RESERVED |
| VC — VC | RESERVED |
| VP — VP | RESERVED |

NOTE: NOT ALL SYMBOLS MAY APPLY TO THIS PROJECT. CONTRACTOR TO REFER TO CEILING & FLOOR PLANS.

HENRY SCHEIN® DESIGN
221 JACOB KEFFER PARKWAY
CONCORD, ON L4K 5T9
1-800-668-5558

# RELOCATION OF DENTAL CLINIC TO 200 JOHN ST., OSHAWA

DURHAM REGION

200 JOHN STREET WEST, OSHAWA, ON L1J 2B4

- IMPORTANT NOTE -
THE IDEAS EXPRESSED HEREIN ARE THE SOLE PROPERTY OF HENRY SCHEIN CANADA, AND MAY NOT BE USED OR REPRODUCED WITHOUT EXPRESSED WRITTEN CONSENT AND FULL PAYMENT OF ANY ASSOCIATED DESIGN FEES. DO NOT SCALE DRAWINGS. ALL DIMENSIONS MUST BE CHECKED AND SITE VERIFIED BY THE GENERAL CONTRACTOR; REPORT ALL ERRORS AND/OR OMISSIONS.

HENRY SCHEIN FSC:
NEIL McTAVISH
416-543-9419
HENRY SCHEIN ESS:
MARK GRANT
416-434-2932
BRANCH: TORONTO

PROJECT START DATE: 2020-10-16
DRAWN BY: BS
USABLE SQ.FT.= -
MOH REG #

REVISIONS:

| | | |
|---|---|---|
| 1 | 2020-12-03 | BS |
| 2 | 2021-01-11 | BS |
| 3 | 2021-01-28 | BS |
| 4 | 2021-02-10 | BS |
| 5 | 2021-03-02 | BS |
| 6 | 2021-03-10 | BS |
| 7 | 2021-03-25 | BS |

PROJECT NORTH:

SCALE: 1/4" = 1'-0"
PROJ No.: **20-053**

**DENTAL PLUMBING WATER & DRAIN LINES**

# P2

P:\ARCHIVE 2020\DURHAM HEALTH-20-053\V4-FINALS\DURHAM HEALTH-20-053-F-R7.DWG - - - 2021-03-25 5:37:43 AM

© 2020 by HENRY SCHEIN CANADA, INC. | HSD INC.

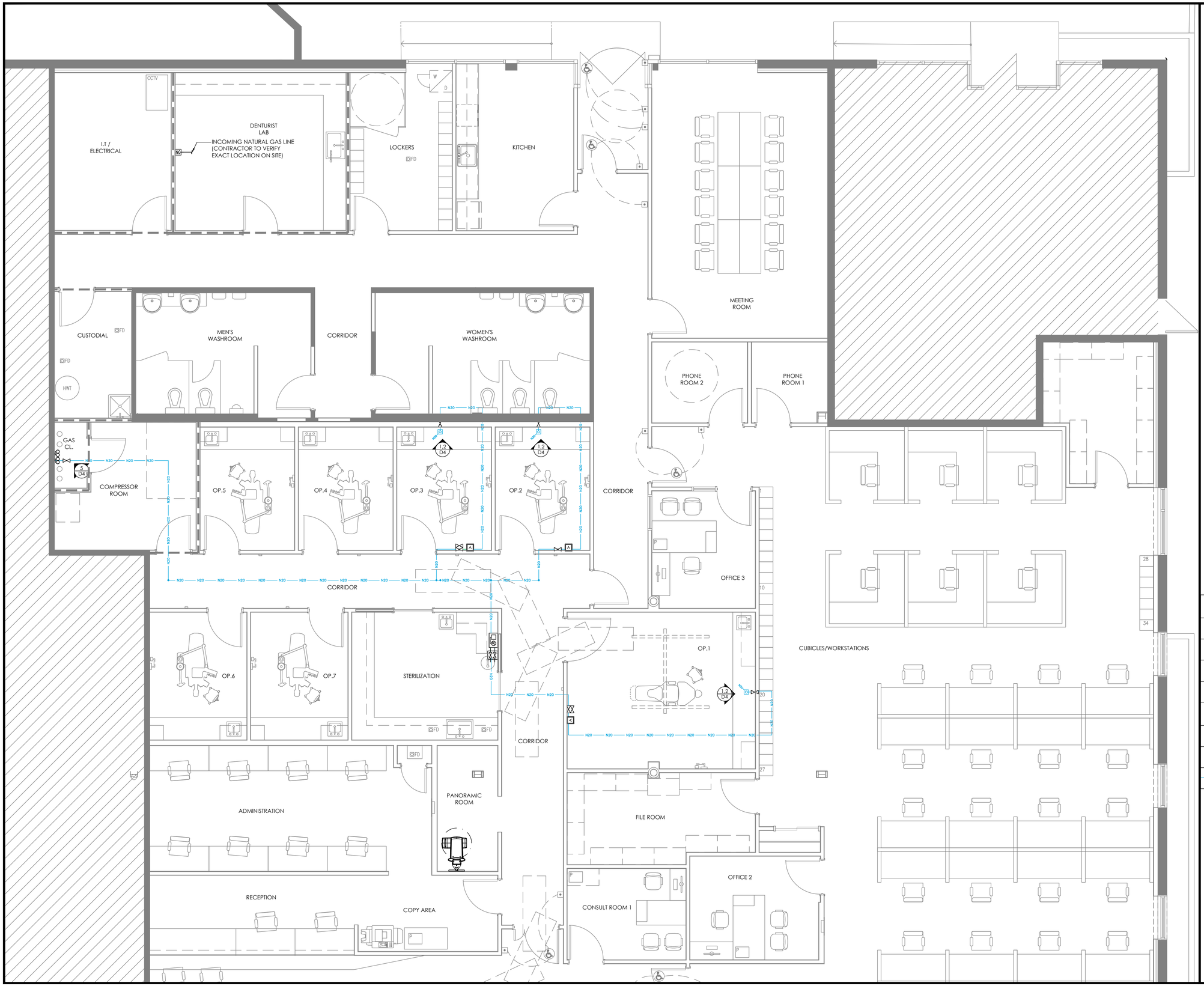


## NON-FLAMMABLE MEDICAL GASES PLUMBING NOTES:

ANY INSTALLATION OF A MEDICAL GAS PIPING SYSTEM IS TO BE DONE BY A QUALIFIED MEDICAL GAS PLUMBER.

ALL MEDICAL GAS PIPING IS TO CONFORM TO:
- CSA B51:19 - BOILER, PRESSURE VESSEL, AND PRESSURE PIPING CODE
- CSA Z305.8-03 (R2018) - MEDICAL SUPPLY UNITS
- CSA Z7396.1-17 - MEDICAL GAS PIPELINE SYSTEMS

AND ANY APPLICABLE ASME, ANSI, OR LOCAL CODES.

PIPELINES SHALL BE SEAMLESS TYPE "K" OR "L" DEGREASED COPPER TUBING ONLY.

COPPER TUBING SHALL BE HARD TEMPER FOR ALL LOCATIONS (REFRIGERATOR TUBING IS NOT PERMITTED).

PIPE SIZES SHALL BE ½" O.D.

ALL PIPING JOINTS EXCEPT THOSE AT VALVES OR EQUIPMENT REQUIRING THREADED CONNECTIONS, SHALL BE MADE WITH SILVER BRAZING ALLOY CONFORMING TO AWS CLASSIFICATION BCuP-5. FOR COPPER TO COPPER CONNECTIONS A FLUX SHALL NOT BE USED.

DURING BRAZING OF PIPE CONNECTIONS, EXCEPT WHEN PERFORMING FINAL CONNECTIONS, THE INTERIOR OF THE PIPE SHALL BE MAINTAINED WITH NITROGEN ATMOSPHERE. THIS SHALL BE DONE BY PURGING THE PIPE A SUFFICIENT NUMBER OF TIMES TO REMOVE ALL AIR AND OXYGEN AND BY MAINTAINING A SMALL PURGE FLOW TO PREVENT THE RE-ENTRY OF AIR OR OXYGEN.

EACH PIPELINE SHALL BEAR AN APPROPRIATE LABEL AT INTERVALS OF 20 FT. BEFORE AND AFTER BARRIERS.

FOLLOWING PIPELINE INSTALLATION, A LEAK TEST MUST BE COMPLETED AT 150 PSI USING OIL-FREE AIR OR OIL-FREE NITROGEN FOR 10 HOURS. THE ONLY ALLOWABLE PRESSURE CHANGE SHALL BE THOSE CAUSED BY VARIATIONS IN AMBIENT TEMPERATURE.

A. CONSTRUCTION CODE INFORMATION
   ASME B31.1 (POWER PIPING) OR B31.3 (PROCESS PIPIING). IN ADDITION, ANY OTHER REQUIREMENTS AS SET OUT IN CSA Z305.8-03 CLAUSE 4, SOURCE OF SUPPLY, SHALL ALSO BE MET.

B. DESIGN PRESSURE
   NOTE: CANNOT BE LESS THAN SAFETY VALVE SET PRESSURE.
   MAX. FOR $O_2$ AND MEDICAL AIR 75 PSI(G).
   MAX. FOR $N_2O$ 70 PSI(G).
   MAX. FOR $N_2$ 200 PSI(G).

C. DESIGN TEMPERATURE
   NOTE: AMBIENT IN MOST CASES.

D. TEST PRESSURE AND TYPE OF TEST
   NOTE: FOR $O_2$, MEDICAL AIR, AND $N_2O$ 150 PSI.
   FOR $N_2$ 300 PSI (MIN.).
   TEST MEDIUM OIL FREE DRY NITROGEN (IN MOST CASES).

E. FLUID SERVICE, OXYGEN AND NITROUS OXIDE IS A CYLINDER SYSTEM (NON-CRYOGENIC) CONSISTING OF 2 BANKS OF 2 CYLINDERS, EACH BANK CONSISTING OF A HEADER, CYLINDER LEADS EQUIPPED WITH NON-RETURN VALVES AT THE HEADER, A SHUTOFF VALVE; AND AN OPERATING PRESSURE REGULATOR.

F. SAFETY VALVE LOCATION AND SET PRESSURES.

G. PIPING SIZE AND SCHEDULE.
   NOTE: MIN. 1/2" O.D. FOR GASES AND 3/4" O.D. FOR VACUUM. SCHEDULE - TYPE "K" OR "L".

H. PIPE MATERIALS SHALL BE HARD TEMPER SEAMLESS COPPER TUBING IN ACCORDANCE WITH ASTM B819.

I. PIPE FITTINGS, WROUGHT COPPER SILVER BRAZED USING AWS STANDARD 5.8, CLASSIFICATION BCuP-5.

## MEDICAL GASES LEGEND

| | |
|---|---|
| | DENTAL CHANGEOVER MANIFOLD WITH REGULATORS; MOUNT @66"AFF. (5 D4) |
| | ZONE VALVE BOX; COMBINED WITH ALARM PANEL. |
| | LOCAL WALL ALARM WITH DIGITAL DISPLAY, CONNECT WITH 6 CONDUCTOR CABLES THROUGH CONDUIT TO MANIFOLD. |
| A | AREA ALARM WITH DIGITAL DISPLAY. (4 D4) |
| | MANUAL ISOLATION / SHUT-OFF VALVE (LOCATE IN CEILING w/ACCESS, UNLESS NOTED OTHERWISE). |
| NG | NATURAL GAS |
| | NITROUS OXIDE ($N_2O$) TERMINAL UNIT. BLUE COVER, WHITE TEXT. |
| N20 N20 | NITROUS OXIDE LINE ½" O.D. TYPE "L" COPPER. |

NOTE: NOT ALL SYMBOLS MAY APPLY TO THIS PROJECT. CONTRACTOR TO REFER TO CEILING & FLOOR PLANS.

HENRY SCHEIN DESIGN
221 JACOB KEFFER PARKWAY
CONCORD, ON L4K 5T9
1-800-668-5558

# RELOCATION OF DENTAL CLINIC TO 200 JOHN ST., OSHAWA

DURHAM REGION

200 JOHN STREET WEST, OSHAWA, ON L1J 2B4

- IMPORTANT NOTE -
THE IDEAS EXPRESSED HEREIN ARE THE SOLE PROPERTY OF HENRY SCHEIN CANADA, AND MAY NOT BE USED OR REPRODUCED WITHOUT EXPRESSED WRITTEN CONSENT AND FULL PAYMENT OF ANY ASSOCIATED DESIGN FEES. DO NOT SCALE DRAWINGS. ALL DIMENSIONS MUST BE CHECKED AND SITE VERIFIED BY THE GENERAL CONTRACTOR; REPORT ALL ERRORS AND/OR OMISSIONS.

HENRY SCHEIN FSC:
NEIL McTAVISH
416-543-9419
HENRY SCHEIN ESS:
MARK GRANT
416-434-2932
BRANCH: TORONTO

PROJECT START DATE: 2020-10-16
DRAWN BY: BS
USABLE SQ.FT.= -

MOH REG #

REVISIONS:

| | | |
|---|---|---|
| 1 | 2020-12-03 | BS |
| 2 | 2021-01-11 | BS |
| 3 | 2021-01-28 | BS |
| 4 | 2021-02-10 | BS |
| 5 | 2021-03-02 | BS |
| 6 | 2021-03-10 | BS |
| 7 | 2021-03-25 | BS |

PROJECT NORTH:

SCALE: 1/4" = 1'-0"
PROJ No.: **20-053**

**DENTAL PLUMBING MEDICAL GASES**

# P3

© 2020 by HENRY SCHEIN CANADA, INC. | HSD INC.

P:\ARCHIVE 2020\DURHAM HEALTH-20-053\4-FINALS\DURHAM HEALTH-20-053-P-R7.DWG --- 2021-03-25 5:37:45 AM

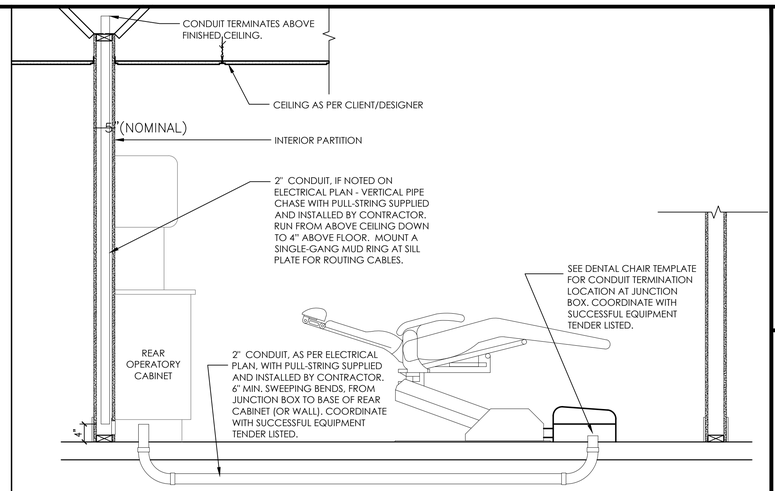


## 7 TYPICAL DENTAL CHAIR CONDUIT SECTION

NOT TO SCALE

FOLLOW LOCAL CODES FOR ALL WORK.

DETAIL PROVIDED FOR UTILITY REQUIREMENTS. REFER TO MANUFACTURER'S INSTALLATION GUIDE FOR ADDITIONAL INFORMATION.

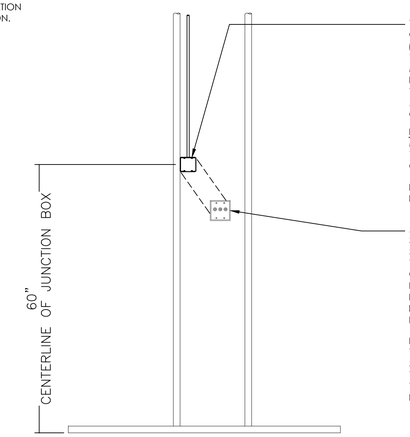


## 5 MECHANICAL REMOTE SHUT-OFF (3 SWITCH)

NOT TO SCALE

FOLLOW LOCAL CODES FOR ALL WORK.

DETAIL PROVIDED FOR UTILITY REQUIREMENTS. REFER TO MANUFACTURER'S INSTALLATION GUIDE FOR ADDITIONAL INFORMATION.

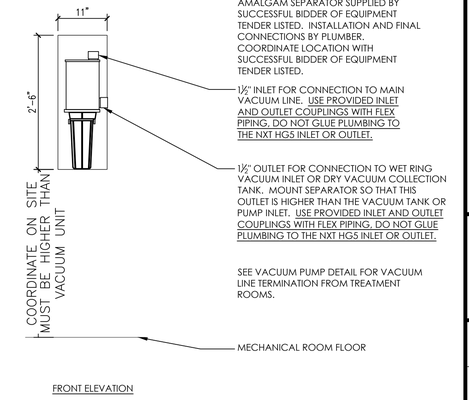


FRONT ELEVATION

## 4 SOLMETEX NXT Hg5 AMALGAM SEPARATOR

NOT TO SCALE

FOLLOW LOCAL CODES FOR ALL WORK.

DETAIL PROVIDED FOR UTILITY REQUIREMENTS. REFER TO MANUFACTURER'S INSTALLATION GUIDE FOR ADDITIONAL INFORMATION.

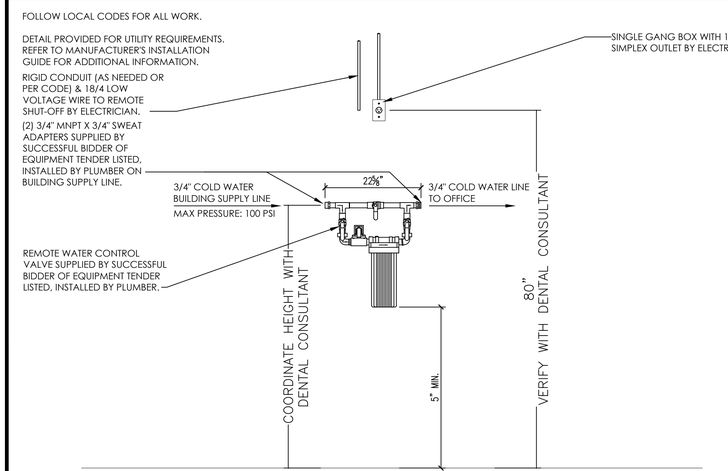


## 3 MIDMARK REMOTE WATER CONTROL VALVE

NOT TO SCALE

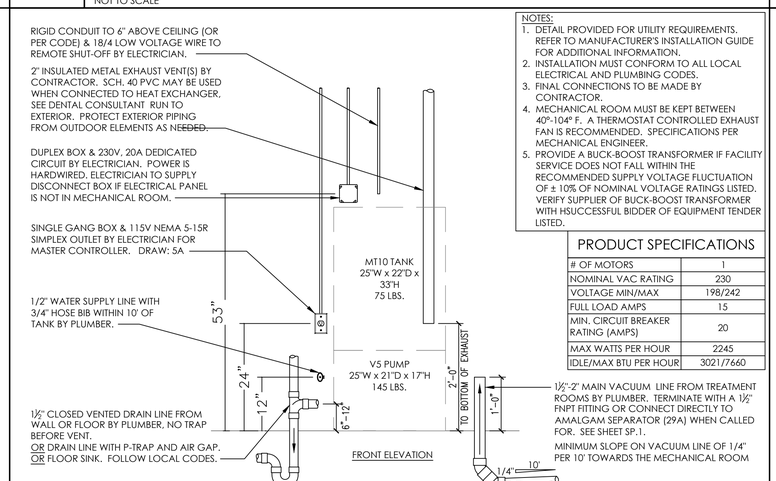


NOTES:
1. DETAIL PROVIDED FOR UTILITY REQUIREMENTS. REFER TO MANUFACTURER'S INSTALLATION GUIDE FOR ADDITIONAL INFORMATION.
2. INSTALLATION MUST CONFORM TO ALL LOCAL ELECTRICAL AND PLUMBING CODES.
3. FINAL CONNECTIONS TO BE MADE BY CONTRACTOR.
4. MECHANICAL ROOM MUST BE KEPT BETWEEN 40°-104° F. A THERMOSTAT CONTROLLED EXHAUST FAN IS RECOMMENDED. SPECIFICATIONS PER MECHANICAL ENGINEER.
5. PROVIDE A BUCK-BOOST TRANSFORMER IF FACILITY SERVICE DOES NOT FALL WITHIN THE RECOMMENDED SUPPLY VOLTAGE FLUCTUATION OF ± 10% OF NOMINAL VOLTAGE RATINGS LISTED. VERIFY SUPPLIER OF BUCK-BOOST TRANSFORMER WITH HSUCCESSFUL BIDDER OF EQUIPMENT TENDER LISTED.

| PRODUCT SPECIFICATIONS | |
|---|---|
| # OF MOTORS | 1 |
| NOMINAL VAC RATING | 230 |
| VOLTAGE MIN/MAX | 198/242 |
| FULL LOAD AMPS | 15 |
| MIN. CIRCUIT BREAKER RATING (AMPS) | 20 |
| MAX WATTS PER HOUR | 2245 |
| IDLE/MAX BTU PER HOUR | 3021/7660 |

FRONT ELEVATION

## 2 AIRTECHNIQUES MOJAVE V5 VACUUM

NOT TO SCALE

THIS COMPRESSOR IS DESIGNED AS A "CATEGORY 3 GAS POWERED DEVICE SUPPLY SYSTEM" AS DEFINED IN NFPA 99.

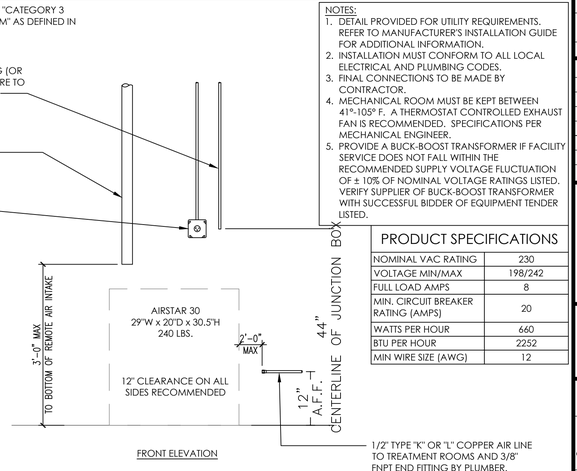


NOTES:
1. DETAIL PROVIDED FOR UTILITY REQUIREMENTS. REFER TO MANUFACTURER'S INSTALLATION GUIDE FOR ADDITIONAL INFORMATION.
2. INSTALLATION MUST CONFORM TO ALL LOCAL ELECTRICAL AND PLUMBING CODES.
3. FINAL CONNECTIONS TO BE MADE BY CONTRACTOR.
4. MECHANICAL ROOM MUST BE KEPT BETWEEN 41°-105° F. A THERMOSTAT CONTROLLED EXHAUST FAN IS RECOMMENDED. SPECIFICATIONS PER MECHANICAL ENGINEER.
5. PROVIDE A BUCK-BOOST TRANSFORMER IF FACILITY SERVICE DOES NOT FALL WITHIN THE RECOMMENDED SUPPLY VOLTAGE FLUCTUATION OF ± 10% OF NOMINAL VOLTAGE RATINGS LISTED. VERIFY SUPPLIER OF BUCK-BOOST TRANSFORMER WITH SUCCESSFUL BIDDER OF EQUIPMENT TENDER LISTED.

| PRODUCT SPECIFICATIONS | |
|---|---|
| NOMINAL VAC RATING | 230 |
| VOLTAGE MIN/MAX | 198/242 |
| FULL LOAD AMPS | 8 |
| MIN. CIRCUIT BREAKER RATING (AMPS) | 20 |
| WATTS PER HOUR | 660 |
| BTU PER HOUR | 2252 |
| MIN WIRE SIZE (AWG) | 12 |

FRONT ELEVATION

## 1 AIRTECHNIQUES AIRSTAR 30 COMPRESSOR

NOT TO SCALE

HENRY SCHEIN® DESIGN
221 JACOB KEFFER PARKWAY
CONCORD, ON L4K 5T9
1-800-668-5558

**RELOCATION OF DENTAL CLINIC TO 200 JOHN ST., OSHAWA**

DURHAM REGION

200 JOHN STREET WEST, OSHAWA, ON L1J 2B4

- IMPORTANT NOTE -
THE IDEAS EXPRESSED HEREIN ARE THE SOLE PROPERTY OF HENRY SCHEIN CANADA, AND MAY NOT BE USED OR REPRODUCED WITHOUT EXPRESSED WRITTEN CONSENT AND FULL PAYMENT OF ANY ASSOCIATED DESIGN FEES. DO NOT SCALE DRAWINGS. ALL DIMENSIONS MUST BE CHECKED AND SITE VERIFIED BY THE GENERAL CONTRACTOR: REPORT ALL ERRORS AND/OR OMISSIONS.

HENRY SCHEIN FSC:
NEIL McTAVISH
416-543-9419
HENRY SCHEIN ESS:
MARK GRANT
416-434-2932
BRANCH: TORONTO

PROJECT START DATE: 2020-10-16
DRAWN BY: BS
USABLE SQ.FT.= -
MOH REG #

REVISIONS:

| | | |
|---|---|---|
| 1 | 2020-12-03 | BS |
| 2 | 2021-01-11 | BS |
| 3 | 2021-01-28 | BS |
| 4 | 2021-02-10 | BS |
| 5 | 2021-03-02 | BS |
| 6 | 2021-03-10 | BS |
| 7 | 2021-03-25 | BS |

PROJECT NORTH:

SCALE: NTS
PROJ No.: **20-053**

**DENTAL ELECTRICAL & PLUMBING DETAILS**

**D1**

© 2020 by HENRY SCHEIN CANADA, INC. | HSD INC.

P:\ARCHIVE 2020\DURHAM HEALTH-20-053\V4-FINALS\DURHAM HEALTH-20-053-F-R7.DWG - - - 2021-03-25 5:37:47 AM

FOLLOW LOCAL CODES FOR ALL WORK.

DETAIL PROVIDED FOR UTILITY REQUIREMENTS. REFER TO MANUFACTURER'S INSTALLATION GUIDE FOR ADDITIONAL INFORMATION.

SYSTEM OVERVIEW
ALL COMPONENTS BELOW PROVIDED WITH UNIT

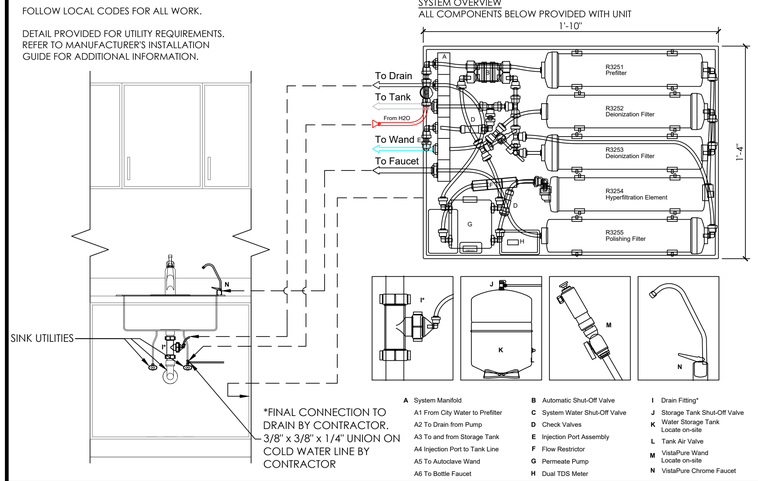


**A** System Manifold
A1 From City Water to Prefilter
A2 To Drain from Pump
A3 To and from Storage Tank
A4 Injection Port to Tank Line
A5 To Autoclave Wand
A6 To Bottle Faucet
**B** Automatic Shut-Off Valve
**C** System Water Shut-Off Valve
**D** Check Valves
**E** Injection Port Assembly
**F** Flow Restrictor
**G** Permeate Pump
**H** Dual TDS Meter
**I** Drain Fitting*
**J** Storage Tank Shut-Off Valve
**K** Water Storage Tank Locate on-site
**L** Tank Air Valve
**M** VistaPure Wand Locate on-site
**N** VistaPure Chrome Faucet

## 9 VISTAPURE V3000 WATER DISTILLATION SYSTEM

NOT TO SCALE

FOLLOW LOCAL CODES FOR ALL WORK.

DETAIL PROVIDED FOR UTILITY REQUIREMENTS. REFER TO MANUFACTURER'S INSTALLATION GUIDE FOR ADDITIONAL INFORMATION.

ELECTRICIAN TO RUN CAT6 CABLING BETWEEN N2O/O2 SYSTEM MANIFOLD AND ALARM PANEL. 100' IS PROVIDED, SEE DENTAL CONSULTANT. LEAVE 12" OF CABLE ON EACH END FOR FINAL CONNECTIONS. PROVIDE RIGID CONDUIT BETWEEN LOCATIONS IF PLENUM SPACE IS INACCESSIBLE OR WHERE REQUIRED BY CODE.

115V SIMPLEX OUTLET BY ELECTRICIAN

MANIFOLD SUPPLIED BY DENTAL CONSULTANT, INSTALLED BY ASSE 6010 CERTIFIED PLUMBER.

CYLINDER RESTRAINTS SUPPLIED AND INSTALLED BY DENTAL CONSULTANT.

CONTRACTOR TO PROVIDE 2x10 BLOCKING IN WALL FOR CYLINDER RESTRAINTS

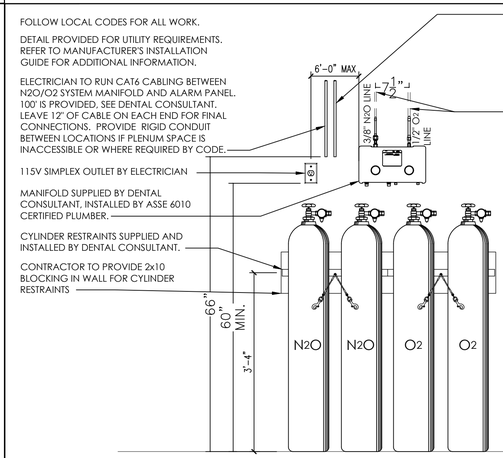


WHERE AN EMERGENCY SHUT-OFF IS REQUIRED BY CODE: ELECTRICIAN TO RUN CAT6 CABLING BETWEEN EMERGENCY SHUT-OFF AND N2O/O2 SYSTEM MANIFOLD. 100' IS PROVIDED BY MANUFACTURER. SEE DENTAL CONSULTANT. LEAVE 12" OF CABLE ON EACH END FOR FINAL CONNECTIONS. PROVIDE 3/4" RIGID CONDUIT BETWEEN LOCATIONS IF PLENUM SPACE IS INACCESSIBLE OR WHERE REQUIRED BY CODE.

ASSE 6010 CERTIFIED PLUMBER TO RUN LINES TO OUTLET STATIONS (7), D.I.S.S. VALVES (7C), OR EMERGENCY SHUT-OFF (34A) DEPENDING ON APPLICATION. SEE SHEET SP.1.

NOTES REGARDING CATAGORY 3 / DENTAL NITROUS OXIDE CONCIOUS SEDATION SYSTEMS:

ALL ASPECTS OF THIS SYSTEM MUST COMPLY WITH THE CURRENTLY ACCEPTED VERSION OF NFPA 99 IN YOUR STATE/MUNICIPALITY. THESE INCLUDE BUT ARE NOT LIMITED TO:
-MATERIALS/INSTALLATION METHODS
-INSTALLER CERTIFICATIONS (ASSE 6010)
-CYLINDER STORAGE CLOSET CONSTRUCTION & VENTILATION REQUIREMENTS
-SYSTEM VERIFICATION CERTIFICATIONS (ASSE 6030)
-SYSTEM COMPONENT LABELING STANDARDS

IT IS THE ARCHITECT'S RESPONSIBILITY TO ENSURE THAT ALL APPLICABLE CODES ARE MET WITHIN THE CONSTRUCTION DOCUMENTS RELATING TO THE NITROUS OXIDE CONSCIOUS SEDATION SYSTEM.

COPIES OF NFPA 99 OR PORTIONS THEREOF MAY BE OBTAINED BY VISITING http://www.nfpa.org, OR CALLING: 1-800-344-3555

## 5 ACCUTRON GUARDIAN $N_2O$,$O_2$ SYSTEM MANIFOLD

NOT TO SCALE

FOLLOW LOCAL CODES FOR ALL WORK.

DETAIL PROVIDED FOR UTILITY REQUIREMENTS. REFER TO MANUFACTURER'S INSTALLATION GUIDE FOR ADDITIONAL INFORMATION.

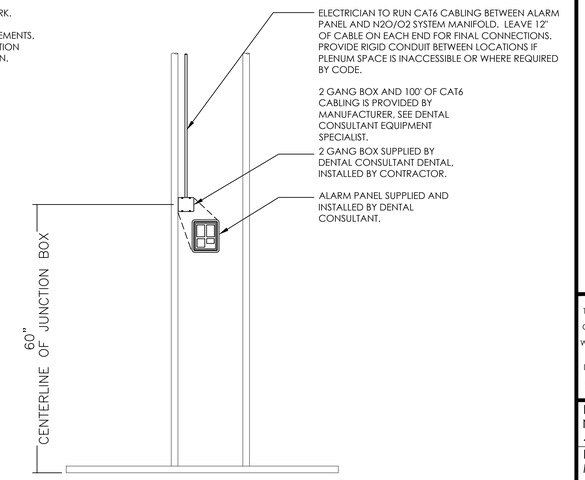


## 4 ACCUTRON N2O, O2 SYSTEM ALARM PANEL

NOT TO SCALE

FOLLOW LOCAL CODES FOR ALL WORK.

DETAIL PROVIDED FOR UTILITY REQUIREMENTS. REFER TO MANUFACTURER'S INSTALLATION GUIDE FOR ADDITIONAL INFORMATION.

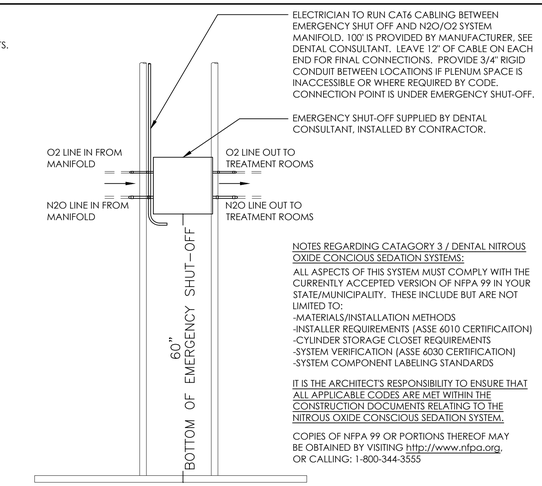


NOTES REGARDING CATAGORY 3 / DENTAL NITROUS OXIDE CONCIOUS SEDATION SYSTEMS:

ALL ASPECTS OF THIS SYSTEM MUST COMPLY WITH THE CURRENTLY ACCEPTED VERSION OF NFPA 99 IN YOUR STATE/MUNICIPALITY. THESE INCLUDE BUT ARE NOT LIMITED TO:
-MATERIALS/INSTALLATION METHODS
-INSTALLER REQUIREMENTS (ASSE 6010 CERTIFICAITON)
-CYLINDER STORAGE CLOSET REQUIREMENTS
-SYSTEM VERIFICATION (ASSE 6030 CERTIFICATION)
-SYSTEM COMPONENT LABELING STANDARDS

IT IS THE ARCHITECT'S RESPONSIBILITY TO ENSURE THAT ALL APPLICABLE CODES ARE MET WITHIN THE CONSTRUCTION DOCUMENTS RELATING TO THE NITROUS OXIDE CONSCIOUS SEDATION SYSTEM.

COPIES OF NFPA 99 OR PORTIONS THEREOF MAY BE OBTAINED BY VISITING http://www.nfpa.org, OR CALLING: 1-800-344-3555

## 3 ACCUTRON N2O, O2 EMERGENCY SHUT-OFF

NOT TO SCALE

FOLLOW LOCAL CODES FOR ALL WORK.

DETAIL PROVIDED FOR UTILITY REQUIREMENTS. REFER TO MANUFACTURER'S INSTALLATION GUIDE FOR ADDITIONAL INFORMATION.

TREATMENT ROOM WALL

CHECK-VALVES SUPPLIED BY DENTAL CONSULTANT, INSTALLED BY ASSE 6010 CERTIFIED PLUMBER. TERMINATE LINES IN CABINET BASE OR LOCATION SPECIFIED IN CABINET UTILITY DETAIL (WHERE APPLICABLE).

VACUUM LINE RISER BY PLUMBER. TERMINATE IN CABINET BASE, SEE UTILITY CENTER DETAIL FOR HEIGHT & LOCATION (WHERE APPLICABLE). FINAL CONNECTIONS TO EQUIPMENT BY DENTAL CONSULTANT.

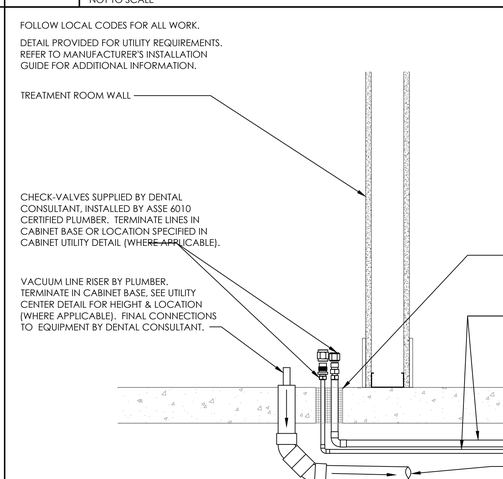


NOTES REGARDING CATAGORY 3 / DENTAL NITROUS OXIDE CONCIOUS SEDATION SYSTEMS:

ALL ASPECTS OF THIS SYSTEM MUST COMPLY WITH THE CURRENTLY ACCEPTED VERSION OF NFPA 99 IN YOUR STATE/MUNICIPALITY. THESE INCLUDE BUT ARE NOT LIMITED TO:
-MATERIALS/INSTALLATION METHODS
-INSTALLER CERTIFICATIONS (ASSE 6010)
-CYLINDER STORAGE CLOSET REQUIREMENTS
-SYSTEM VERIFICATION CERTIFICATIONS (ASSE 6030)
-SYSTEM COMPONENT LABELING STANDARDS

IT IS THE ARCHITECT'S RESPONSIBILITY TO ENSURE THAT ALL APPLICABLE CODES ARE MET WITHIN THE CONSTRUCTION DOCUMENTS RELATING TO THE NITROUS OXIDE CONSCIOUS SEDATION SYSTEM.

COPIES OF NFPA 99 OR PORTIONS THEREOF MAY BE OBTAINED BY VISITING http://www.nfpa.org, OR CALLING: 1-800-344-3555

## 2 N2O, O2 SYSTEM TREATMENT ROOM TERMINATIONS @ FLOOR

NOT TO SCALE

FOLLOW LOCAL CODES FOR ALL WORK.

DETAIL PROVIDED FOR UTILITY REQUIREMENTS. REFER TO MANUFACTURER'S INSTALLATION GUIDE FOR ADDITIONAL INFORMATION.

TREATMENT ROOM WALL

ASSE 6010 CERTIFIED PLUMBER TO PROVIDE 3/8" N2O, 1/2" O2 LINES FROM MANIFOLD (33), OR EMERGENCY SHUT-OFF (34A) DEPENDING ON APPLICATION, SEE SHEET SP.1. SEE CABINET UTILITY DETAIL FOR HEIGHTS AND LOCATIONS (WHERE APPLICABLE).

CHECK-VALVES SUPPLIED BY DENTAL CONSULTANT, INSTALLED BY ASSE 6010 CERTIFIED PLUMBER. TERMINATE LINES IN CABINET BASE OR LOCATION SPECIFIED IN CABINET UTILITY DETAIL (WHERE APPLICABLE).

VACUUM LINE RISER BY PLUMBER. TERMINATE IN CABINET BASE, SEE UTILITY CENTER DETAIL FOR HEIGHT & LOCATION (WHERE APPLICABLE). FINAL CONNECTIONS TO EQUIPMENT BY DENTAL CONSULTANT.

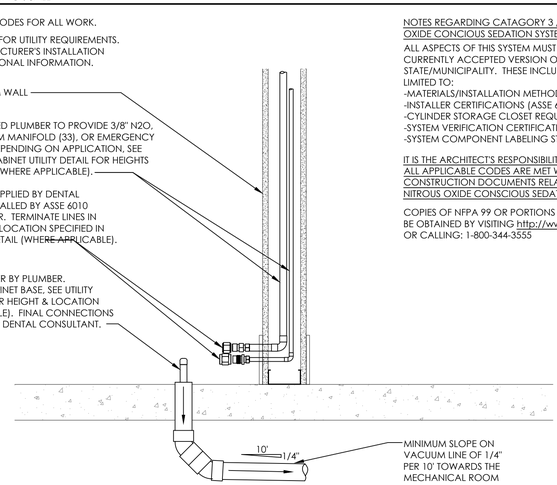


NOTES REGARDING CATAGORY 3 / DENTAL NITROUS OXIDE CONCIOUS SEDATION SYSTEMS:

ALL ASPECTS OF THIS SYSTEM MUST COMPLY WITH THE CURRENTLY ACCEPTED VERSION OF NFPA 99 IN YOUR STATE/MUNICIPALITY. THESE INCLUDE BUT ARE NOT LIMITED TO:
-MATERIALS/INSTALLATION METHODS
-INSTALLER CERTIFICATIONS (ASSE 6010)
-CYLINDER STORAGE CLOSET REQUIREMENTS
-SYSTEM VERIFICATION CERTIFICATIONS (ASSE 6030)
-SYSTEM COMPONENT LABELING STANDARDS

IT IS THE ARCHITECT'S RESPONSIBILITY TO ENSURE THAT ALL APPLICABLE CODES ARE MET WITHIN THE CONSTRUCTION DOCUMENTS RELATING TO THE NITROUS OXIDE CONSCIOUS SEDATION SYSTEM.

COPIES OF NFPA 99 OR PORTIONS THEREOF MAY BE OBTAINED BY VISITING http://www.nfpa.org, OR CALLING: 1-800-344-3555

## 1 N2O, O2 SYSTEM TREATMENT ROOM TERMINATIONS @ WALL

NOT TO SCALE

HENRY SCHEIN® DESIGN
221 JACOB KEFFER PARKWAY
CONCORD, ON L4K 5T9
1-800-668-5558

**RELOCATION OF DENTAL CLINIC TO 200 JOHN ST., OSHAWA**

DURHAM REGION

200 JOHN STREET WEST, OSHAWA, ON L1J 2B4

**- IMPORTANT NOTE -**
THE IDEAS EXPRESSED HEREIN ARE THE SOLE PROPERTY OF HENRY SCHEIN CANADA, AND MAY NOT BE USED OR REPRODUCED WITHOUT EXPRESSED WRITTEN CONSENT AND FULL PAYMENT OF ANY ASSOCIATED DESIGN FEES. DO NOT SCALE DRAWINGS. ALL DIMENSIONS MUST BE CHECKED AND SITE VERIFIED BY THE GENERAL CONTRACTOR: REPORT ALL ERRORS AND/OR OMISSIONS.

HENRY SCHEIN FSC:
NEIL McTAVISH
416-543-9419
HENRY SCHEIN ESS:
MARK GRANT
416-434-2932
BRANCH: TORONTO

PROJECT START DATE: 2020-10-16
DRAWN BY: BS
USABLE SQ.FT.= -

MOH REG #

REVISIONS:

| | | |
|---|---|---|
| 1 | 2020-12-03 | BS |
| 2 | 2021-01-11 | BS |
| 3 | 2021-01-28 | BS |
| 4 | 2021-02-10 | BS |
| 5 | 2021-03-02 | BS |
| 6 | 2021-03-10 | BS |
| 7 | 2021-03-25 | BS |

PROJECT NORTH:

SCALE: NTS
PROJ No.: **20-053**

**DENTAL ELECTRICAL & PLUMBING DETAILS**

**D2**

© 2020 by HENRY SCHEIN CANADA, INC. | HSD INC.

P:\ARCHIVE 2020\DURHAM HEALTH-20-053\V4-FINALS\DURHAM HEALTH-20-053-F-R7.DWG - - - 2021-03-25 5:37:49 AM